REVISION				
REV	DESCRIPTION	DRAWN	APPR	DATE
1	Initial Registration	T.J.KIM	J.H.YOUN	2017.03.15.

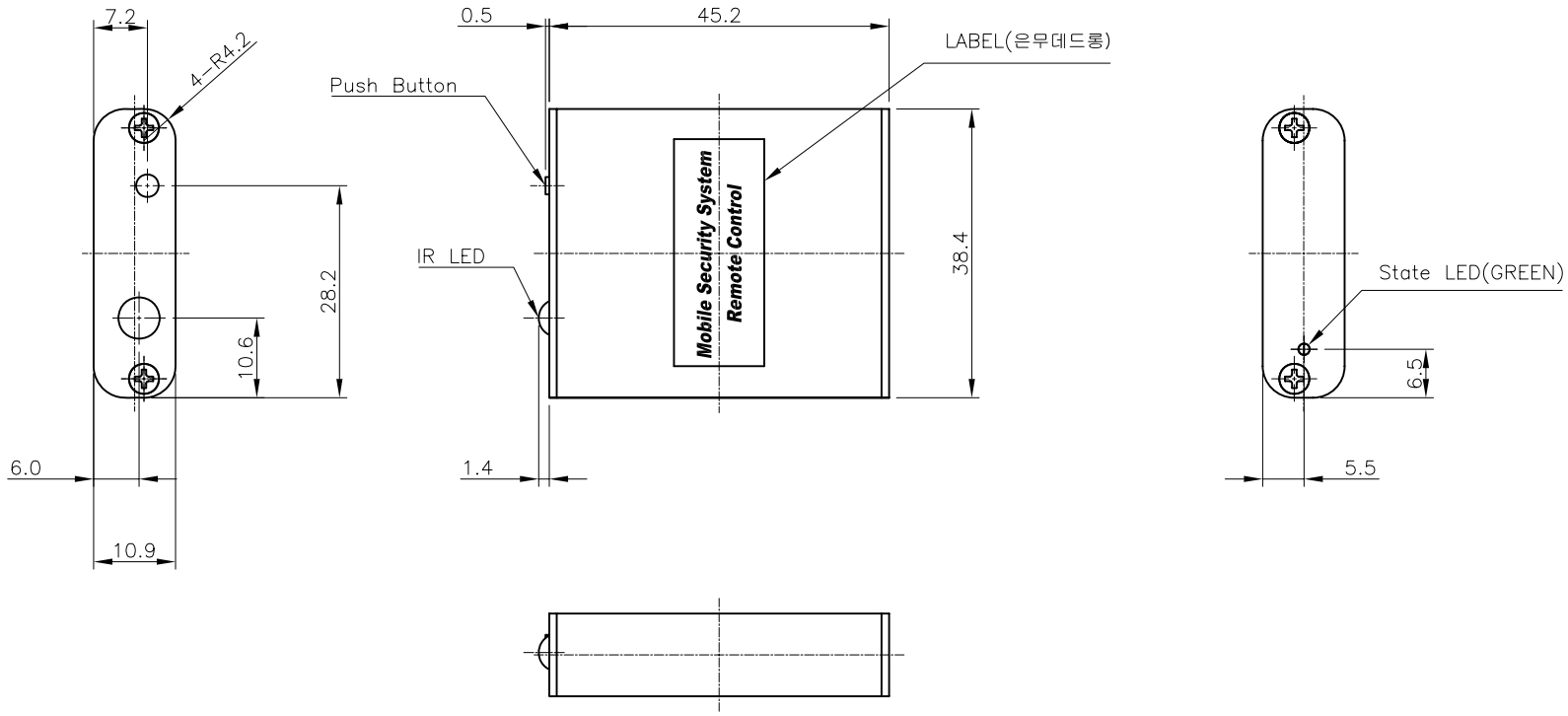

* ELECTRICAL SPECIFICATIONS
- Battery : CR2025/3V
- Control Angle : 30°
- Dynamic Current : 1mA(Key Press)
- Launch Distance(Min.) : 5M
- Oscillation Frequency : 455KHz
- Carrier Frequency : 38KHz
- Infrared Wavelengths : 940
- 3 times data transmission in switch operation

* NOTE
- Replaceable battery
- Housing material : Aluminum(A6063)
- Housing post-treatment : Anodizing(BLACK) 반광

TOLERANCE	Decimal ±0.3	DATE 2017. 03. 15.		
	Angle ±1°	APPROVED BY	J.H.YOUN	
		CHECKED BY	S.L.SON	
MATERIAL A6063		DRAWN BY	T.J.KIM	
FINISH Anodizing(BLACK)반광		SCALE 1/1	UNIT mm	

KJ COMTECH
KJ COMTECH CO.,LTD.
RF & MICROWAVE TECHNOLOGY
Tel : 82-32-347-8015
Fax : 82-32-347-8017

TITLE
IR Remote Control

A4

DWG NO. PM00026-7/1

REVISION 1

SHEET 1 of 1