REVISION				
REV	DESCRIPTION	DRAWN	APPR	DATE
1	Initial Registration	K.I.CHO	S.W.LEE	2005. 1. 6.

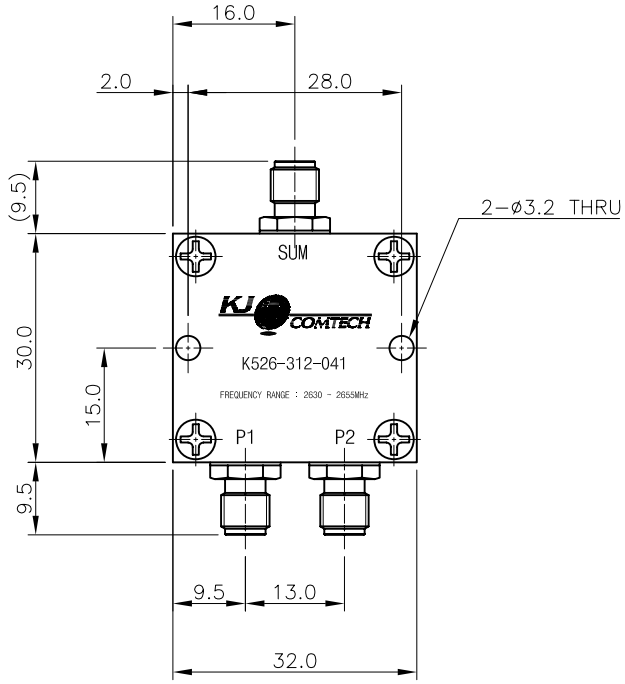

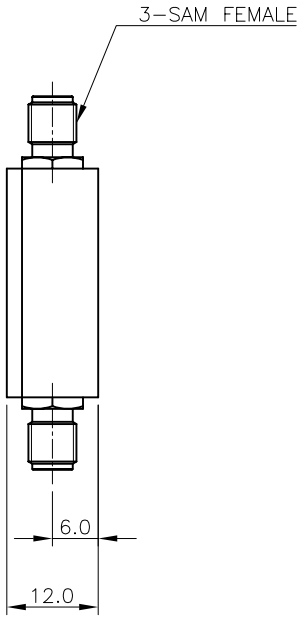

* ELECTRICAL SPECIFICATIONS
Frequency Range : 2630~2655MHz
Insertion Loss (Max.) : 3.3dB
V.S.W.R (Max.) : 1.2 : 1
Isolation (Min.) : 20.0dB
Power Handling (Max.) : 1.0W
Impedance : 50Ω

* MECHANICAL SPECIFICATIONS
HOUSING : A6061 T6 (Yellow Chromate)
CONNECTORS : MBsBD (Nickel Plate)
CONNECTORS PINS : Beryllium Copper (Gold Plate)
INSULATORS : TEFLON

TOLERANCE	Decimal ±0.3	DATE	2005. 1. 6.
	Angle ±1°	APPROVED BY	S.W.LEE
		CHECKED BY	J.H.YOUN
MATERIAL	A6061 T6	DRAWN BY	K.I.CHO
FINISH	Yellow Chromate	SCALE 1/1	UNIT mm

KJ COMTECH
KJ COMTECH CO.,LTD.
RF & MICROWAVE TECHNOLOGY
Tel : 82-32-347-8015
Fax : 82-32-347-8017

TITLE
2WAY POWER DIVIDER

A4

DWG NO. PD00106-7/1
REVISION 1
SHEET 1 of 1