REVISION				
REV	DESCRIPTION	DRAWN	APPR	DATE
IR	Initial Registration	S.Y.EUN	S.H.KIM	2022.09.23.

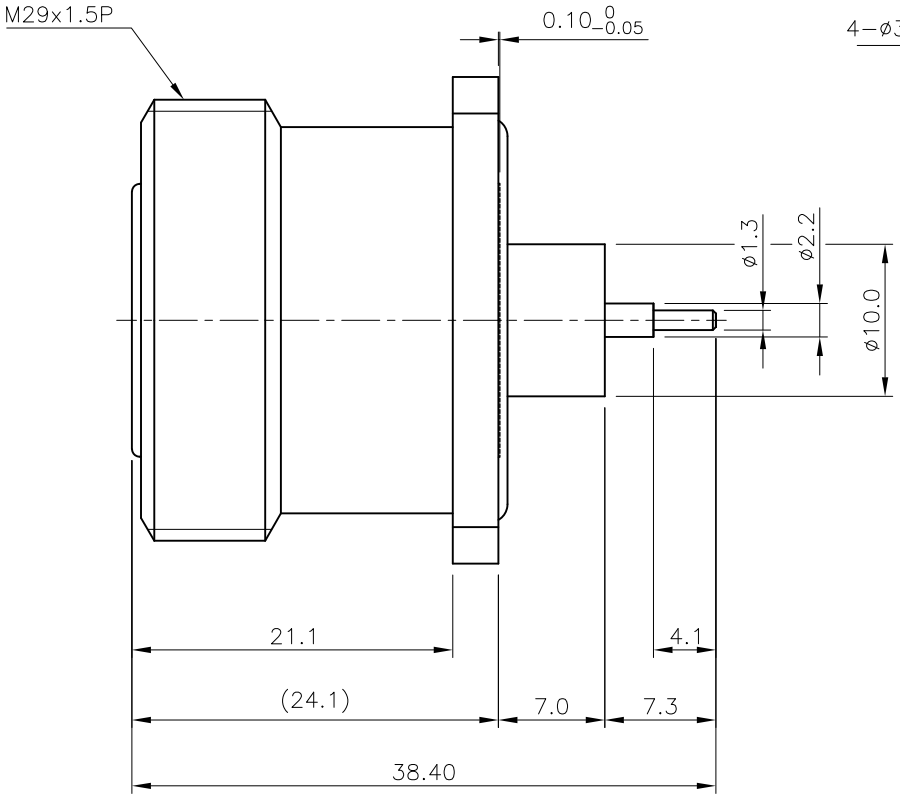

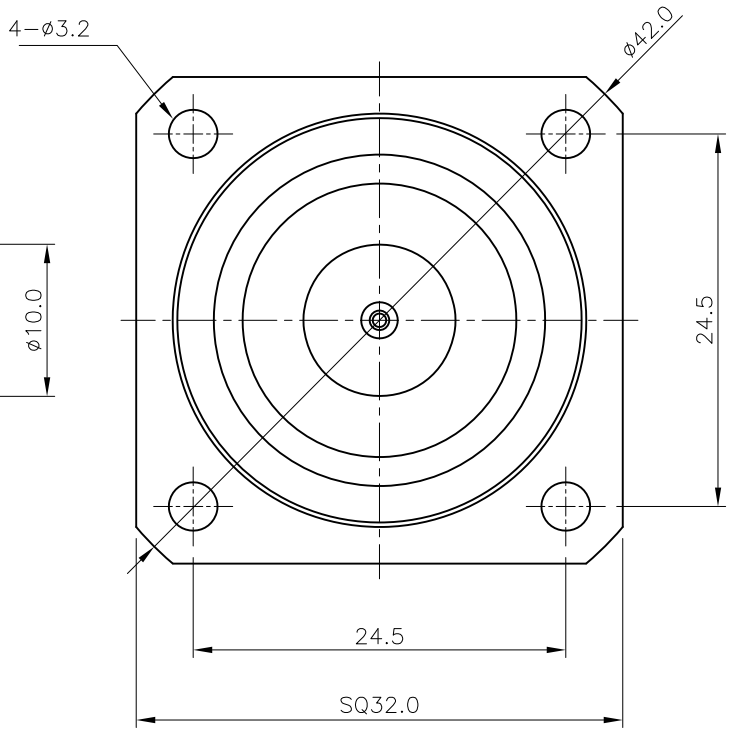

NO.	DESCRIPTION	Q'TY	MATERIAL	PLATING	CODE
4	INSULATOR	1	TEFLON		DIN03315-N/1
3	GASKET	1	SILICONE	RED	DGK00199-N/1
2	CONTACT	1	MBsBD C3601BD	Silver Plate (3μm)	DCT04328-5/1
1	BODY	1	MBsBD C3604BD-F	SUCO Plate	DBD04856-5/1

TOLERANCE	Decimal ±0.1	DATE	2022. 09. 23.
	Angle ±1°°	APPROVED BY	S.H.KIM
		CHECKED BY	
MATERIAL		DRAWN BY	S.Y.EUN
FINISH		SCALE 2/1	UNIT mm

KJ COMTECH
KJ COMTECH CO.,LTD.
RF & MICROWAVE TECHNOLOGY
Tel : 82-32-347-8015
Fax : 82-32-347-8017

TITLE
7/16 DIN50 SOLDER END JS-4H

A4

DWG NO. CN04076-7/1

REVISION I R

SHEET 1 of 1