| REVISION | | | | |
|---|---|---|---|---|
| REV | DESCRIPTION | DRAWN | APPR | DATE |
| IR | Initial Registration | S.Y.EUN | I.C.KIM | 2021.07.01. |
| 1 | 고객사 요청으로 인한 평와셔 추가 | S.Y.EUN | I.C.KIM | 2021.08.26. |

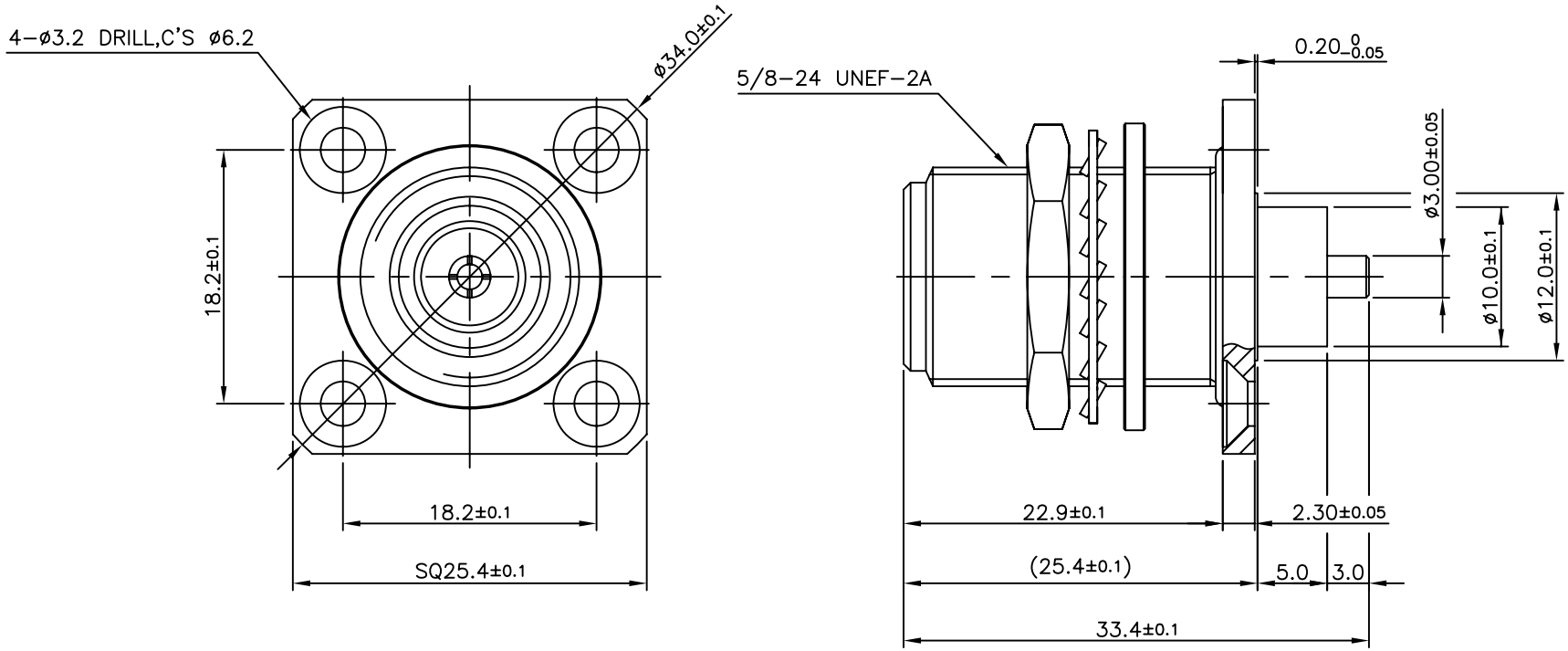


| NO. | DESCRIPTION | Q'TY | MATERIAL | PLATING | CODE |
|---|---|---|---|---|---|
| 7 | WASHER | 1 | MBsBD C3604BD-F | 이원합금 (NI/TIN) | DWA00118-5/2 |
| 6 | WASHER | 1 | BsS | 이원합금 (NI/TIN) | DWA00045-5/3 |
| 5 | NUT | 1 | MBsBD C3604BD-F | 이원합금 (NI/TIN) | DNT00033-5/3 |
| 4 | INSULATOR | 1 | TEFLON | | DIN02337-N/1 |
| 3 | GASKET | 1 | SILICONE | Red | DGK00042-N/2 |
| 2 | CONTACT | 1 | BeCu C17300 | Silver Plate (6.0㎛) | DCT04233-5/1 |
| 1 | BODY | 1 | MBsBD C3604BD-F | 이원합금 (NI/TIN) | DBD04760-5/1 |

■ 가공공차 : ISO-2768-F급 관리

| | | | |
|---|---|---|---|
| TOLERANCE | Decimal ±0.2 | DATE | 2021. 08. 26. |
| | Angle ±1° | APPROVED BY | I.C.KIM |
| MATERIAL | ——— | CHECKED BY | |
| | | DRAWN BY | S.Y.EUN |
| FINISH | ——— | SCALE 2/1 | UNIT mm |


KJ COMTECH
KJ COMTECH CO.,LTD.
RF & MICROWAVE TECHNOLOGY
Tel : 82-32-347-8015
Fax : 82-32-347-8017


TITLE N50 SOLDER END JB-4H

A4 DWG NO. CN04007-7/1

REVISION 1 SHEET 1 of 1