REVISION				
REV	DESCRIPTION	DRAWN	APPR	DATE
IR	Initial Registration	S.Y.EUN	I.C.KIM	2021.05.11.

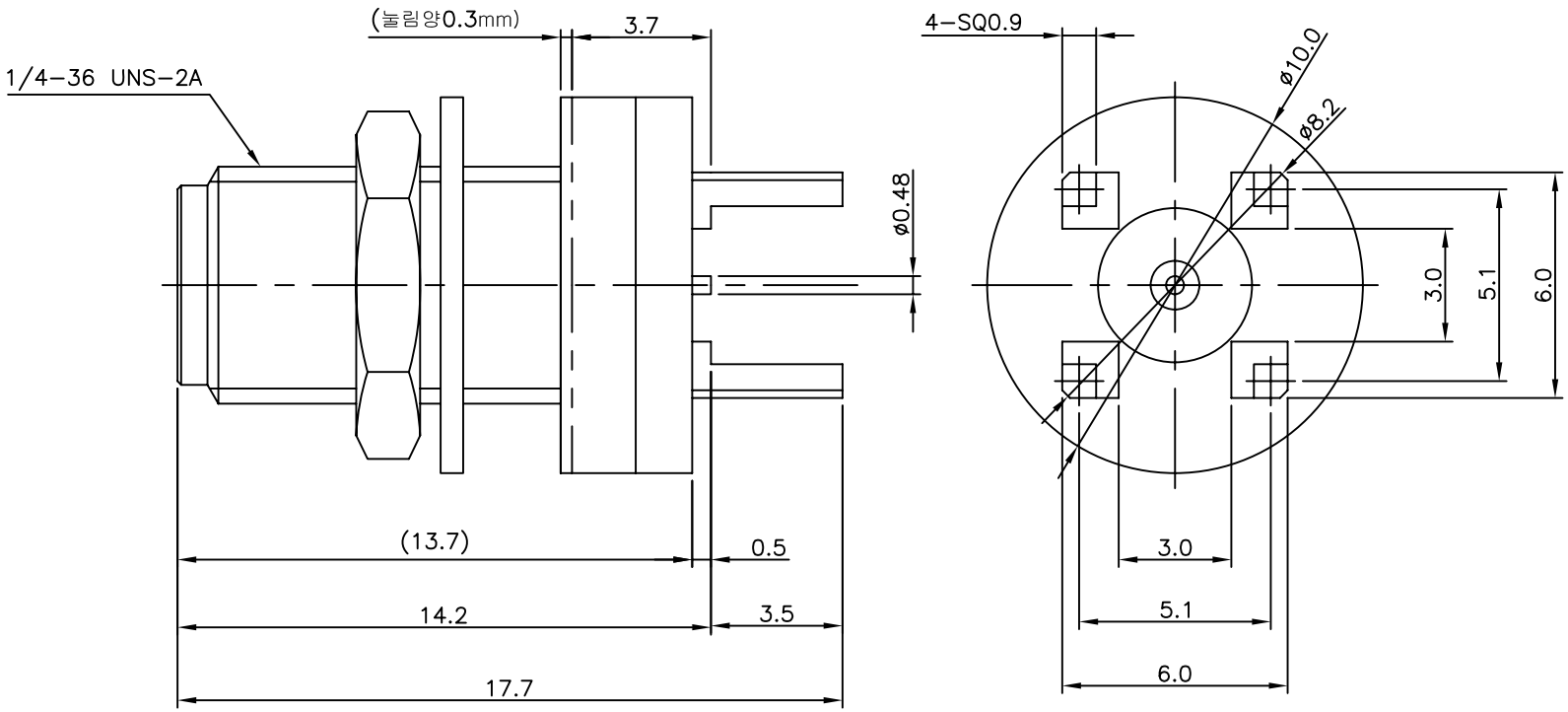

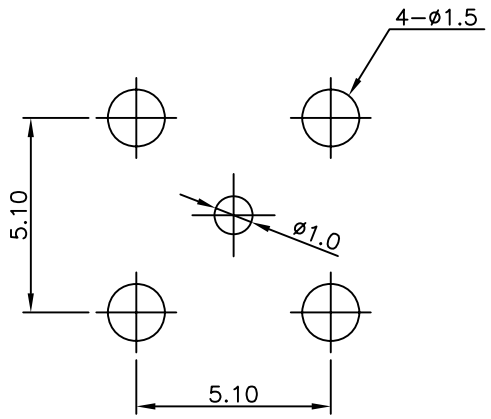

PCB MOUNTING HOLE

NO.	DESCRIPTION	Q'TY	MATERIAL	PLATING	CODE
6	WASHER	1	MBsBD C3604BD-F	Nickel Plate	DWA00122-5/1
5	NUT	1	MBsBD C3604BD-F	Nickel Plate	DNT00025-5/5
4	EMI GASKET	1	Carbon	BLACK	DGK00324-N/1
3	INSULATOR	1	TEFLON		DIN02974-N/1
2	CONTACT	1	BeCu C17300	Gold Plate	DCT04215-5/1
1	BODY	1	MBsBD C3604BD-F	Nickel Plate (남땜성향상)	DBD04729-5/1

TOLERANCE	Decimal ±0.2	DATE	2021. 05. 11.
	Angle ±1°	APPROVED BY	I.C.KIM
		CHECKED BY	
MATERIAL		DRAWN BY	S.Y.EUN
FINISH		SCALE 5/1	UNIT mm

KJ COMTECH
KJ COMTECH CO.,LTD.
RF & MICROWAVE TECHNOLOGY
Tel : 82-32-347-8015
Fax : 82-32-347-8017

TITLE: SMA50 PCB JB-4R

A4 | DWG NO. CN03990-7/1 | REVISION I R | SHEET 1 of 1