| REVISION | | | | |
|---|---|---|---|---|
| REV | DESCRIPTION | DRAWN | APPR | DATE |
| IR | Initial Registration | I.C.KIM | | 2017. 08. 09 |

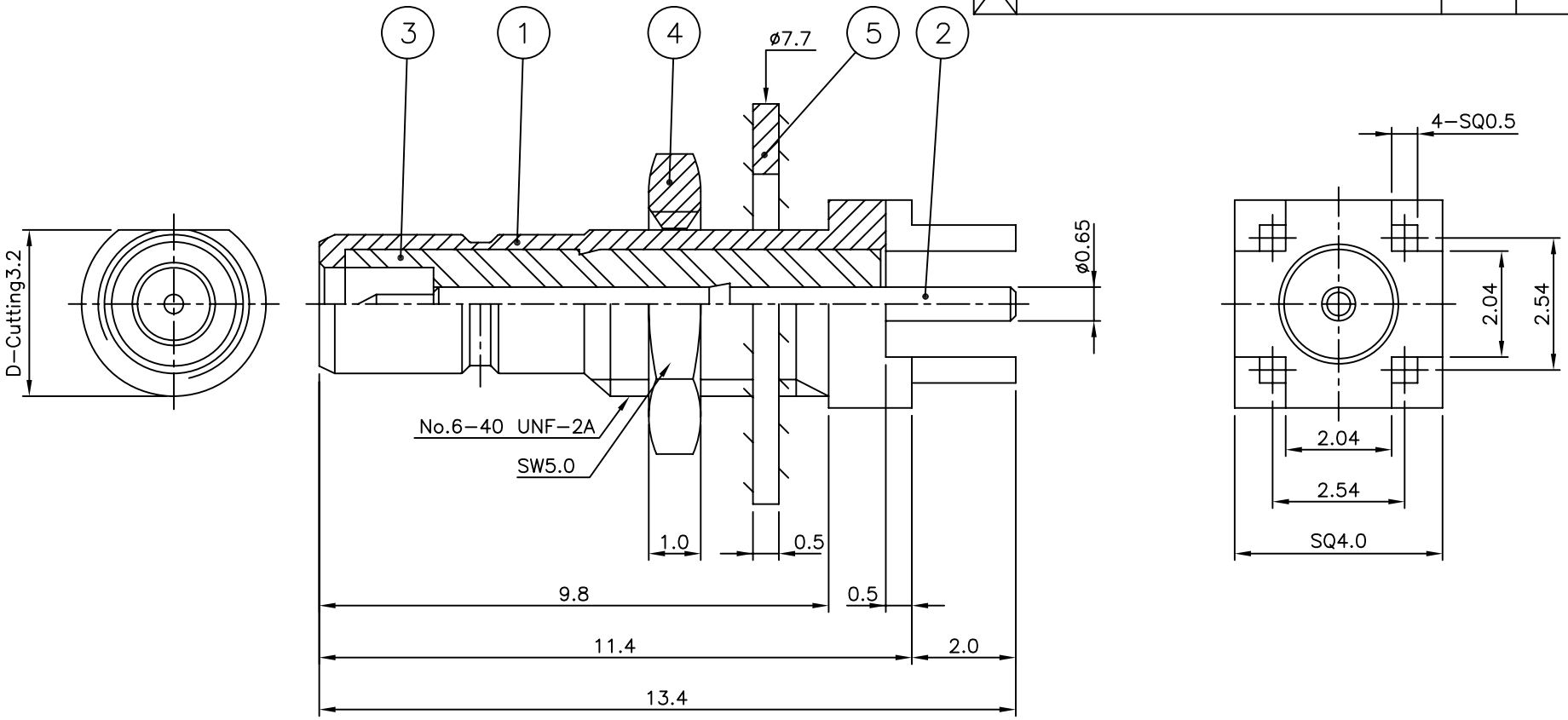


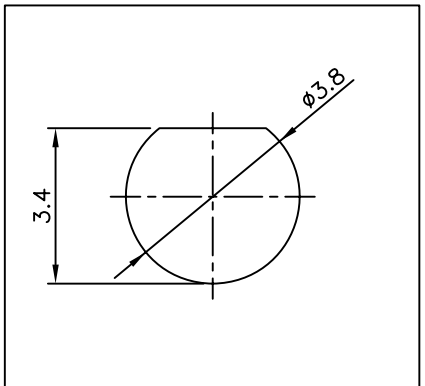


PANEL MOUNTING HOLE SIZE

| NO. | DESCRIPTION | Q'TY | MATERIAL | PLATING | CODE |
|---|---|---|---|---|---|
| 5 | WASHER | 1 | BsS | Gold Plate | DWA00008-5/1 |
| 4 | NUT | 1 | MBsBD C3604BD-F | Gold Plate | DNT00015-5/1 |
| 3 | INSULATOR | 1 | TEFLON | | DIN02936-N/1 |
| 2 | CONTACT | 1 | MBsBD C3604BD-F | Gold Plate | DCT03874-5/1 |
| 1 | BODY | 1 | MBsBD C3604BD-F | Gold Plate | DBD04348-5/1 |

| | | | |
|---|---|---|---|
| TOLERANCE | Decimal ±0.1 | DATE | 2017. 08. 09. |
| | Angle ±1° | APPROVED BY | |
| | | CHECKED BY | |
| MATERIAL | | DRAWN BY | I.C.KIM |
| FINISH | | SCALE 8/1 | UNIT mm |


KJ COMTECH
KJ COMTECH CO.,LTD.
RF & MICROWAVE TECHNOLOGY
Tel : 82-32-347-8015
Fax : 82-32-347-8017


TITLE: SSMB50 PCB JB-4R

A4 | DWG NO. CN03718-7/1 | REVISION I R | SHEET 1 of 1