REVISION				
REV	DESCRIPTION	DRAWN	APPR	DATE
IR	Initial Registration	S.Y.EUN	S.H.KIM	2022.05.27.

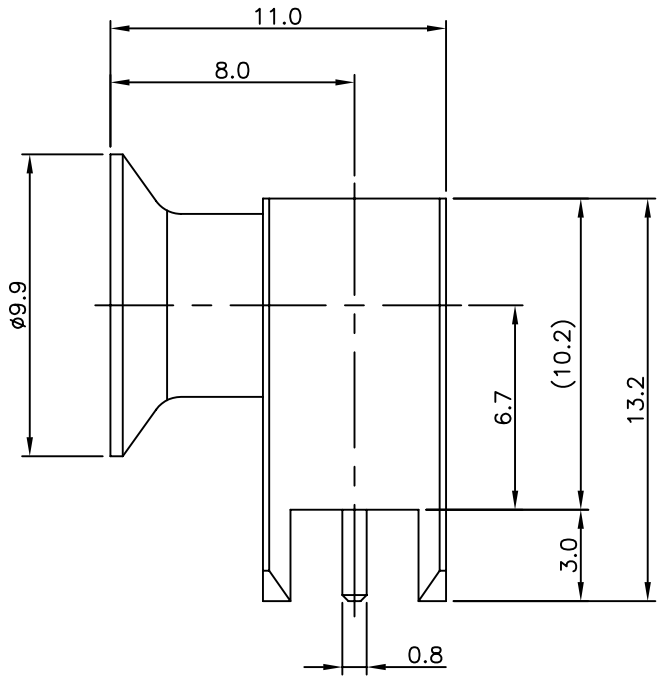

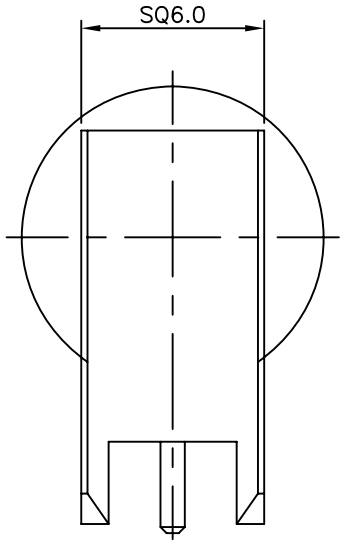

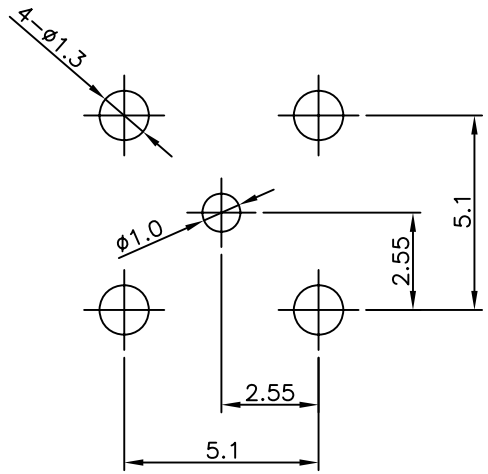

PCB MOUNTING HOLE SIZE
(SCALE 5:1)

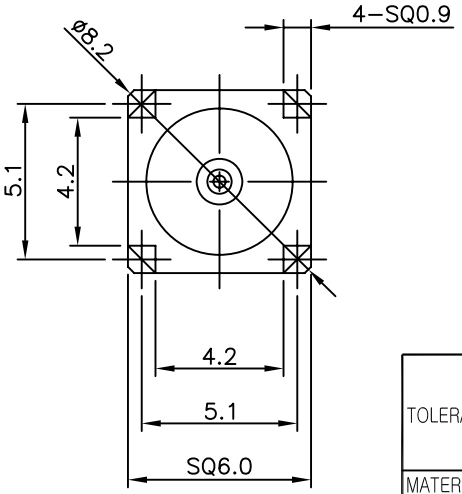

NO.	DESCRIPTION	Q'TY	MATERIAL	PLATING	CODE
5	INSULATOR	1	TEFLON		DIN03297-N/1
4	INSULATOR	1	TEFLON		DIN03002-N/4
3	CONTACT	1	MBsBD C3604BD-F	Gold Plate	DCT04309-5/1
2	BODY (B)	1	MBsBD C3604BD-F	Nickel Plate	DBD04414-5/4
1	BODY (A)	1	MBsBD C3604BD-F	Nickel Plate (납땜성향상)	DBD04415-5/3

TOLERANCE	Decimal ±0.2	DATE	2022. 05. 27.
	Angle ±1°	APPROVED BY	S.H.KIM
		CHECKED BY	
MATERIAL		DRAWN BY	S.Y.EUN
FINISH		SCALE 4/1	UNIT mm

KJ COMTECH
KJ COMTECH CO.,LTD.
RF & MICROWAVE TECHNOLOGY
Tel : 82-32-347-8015
Fax : 82-32-347-8017

TITLE: BMBC50 PCB JL-4R

A4 | DWG NO. CN03675-7/8 | REVISION I R | SHEET 1 of 1