REVISION				
REV	DESCRIPTION	DRAWN	APPR	DATE
IR	Initial Registration	I.C.KIM		2017.09.11.
1	GASKET 재질 변경 (NBR -> SILICONE, DGK00305-N/1 -> DGK00305-N/2)	S.Y.EUN	I.C.KIM	2019.11.06.

* WASHER, NUT 별도 표장 할 것.
(DWA00048-5/2, DWA00139-5/1, DNT00012-5/1)

* 2번 PIN 조립시 CABLE 심선과 밀착하여 땜 할 것

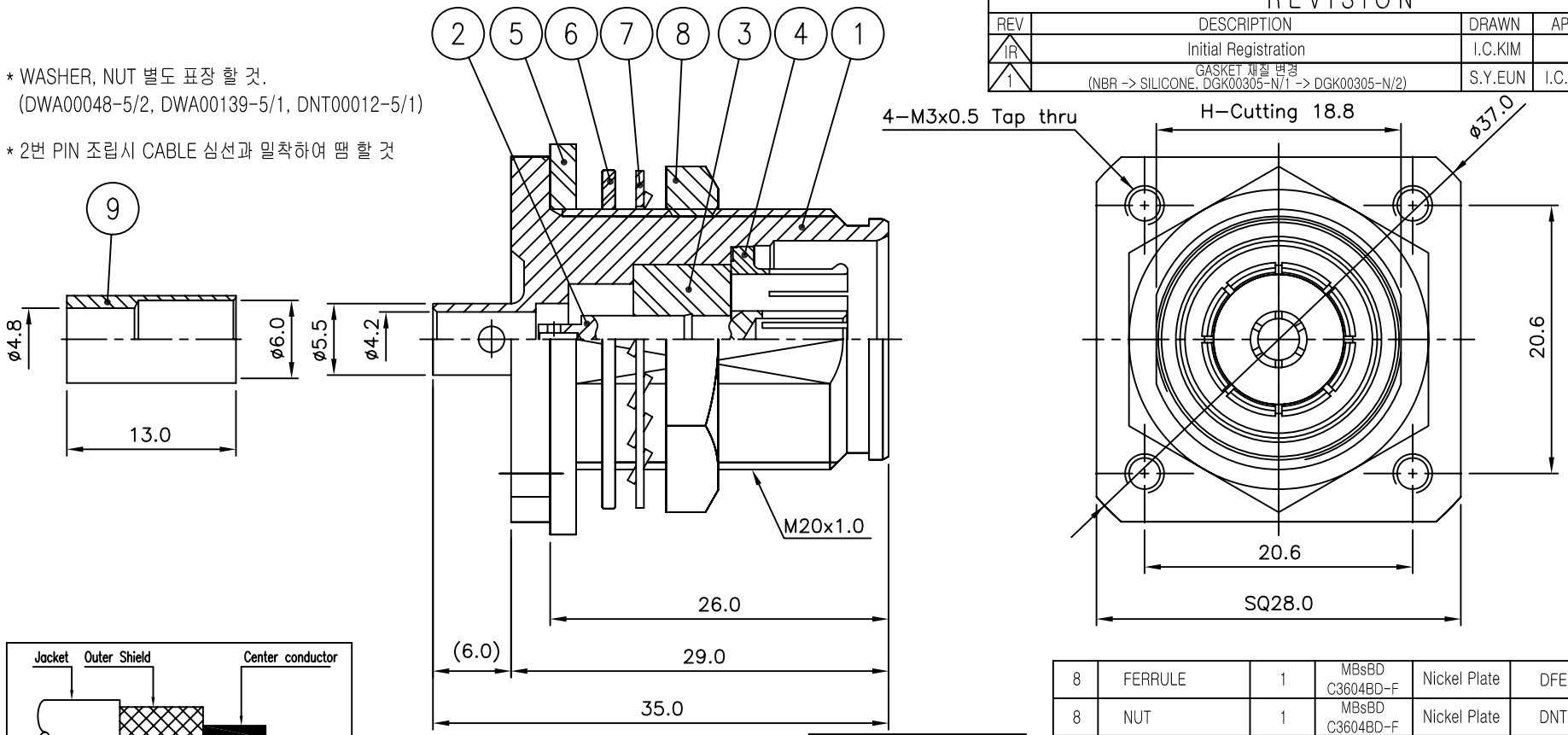

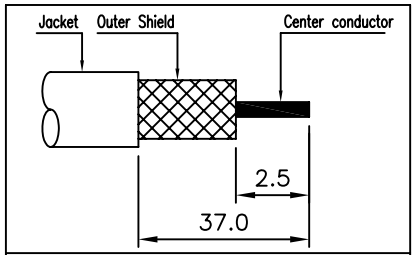

CABLE 탈피도

* 조립 순서
1. BODY에 TEFLON을 조립한다.
2. 조립한 BODY에 JACK을 억지끼움한다.
(JACK 조립시 CEQ00447-N/1 정해진 JIG 사용하여 조립 한다.)

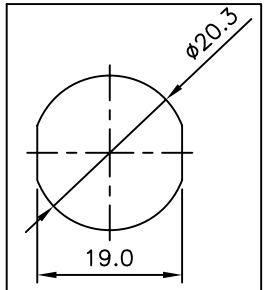

PANEL MOUNTING HOLE SIZE
SCALE 1:1

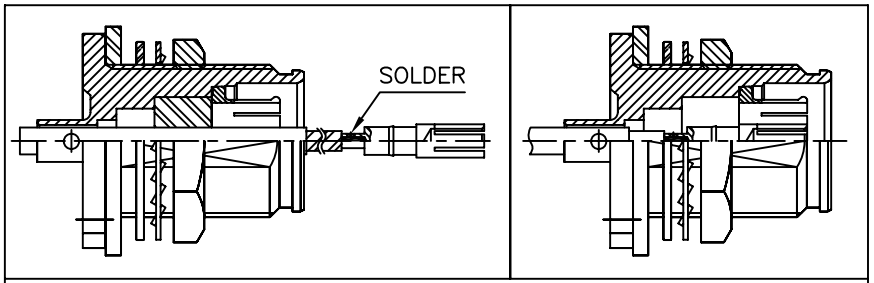

PIN+CABLE 조립 방법

NO.	DESCRIPTION	Q'TY	MATERIAL	PLATING	CODE
8	FERRULE	1	MBsBD C3604BD-F	Nickel Plate	DFE00205-5/1
8	NUT	1	MBsBD C3604BD-F	Nickel Plate	DNT00012-5/1
7	WASHER	1	SUS	부동태처리	DWA00139-5/1
6	WASHER	1	MBsBD C3604BD-F	Nickel Plate	DWA00048-5/2
5	GASKET	1	SILICONE		DGK00305-N/2
4	JACK	1	MBsBD C3604BD-F	Silver Plate (3㎛)	DJA00228-5/6
3	INSULATOR	1	TEFLON		DIN02811-N/2
2	CONTACT	1	MBsBD C3604BD-F	Silver Plate (5㎛)	DCT03739-5/2
1	BODY	1	MBsBD C3604BD-F	SUCO Plate (3㎛)	DBD04204-5/3

TOLERANCE	Decimal ±0.2	DATE	2019. 11. 06.
	Angle ±1°	APPROVED BY	I.C.KIM
MATERIAL		CHECKED BY	
		DRAWN BY	S.Y.EUN
FINISH		SCALE 2/1	UNIT mm

KJ COMTECH
KJ COMTECH CO.,LTD.
RF & MICROWAVE TECHNOLOGY
Tel : 82-32-347-8015
Fax : 82-32-347-8017

TITLE
4.3/10 DIN50 CABLE JB(F/N) 141FJ

A4 | DWG NO. CN03638-7/3 | REVISION 1 | SHEET 1 of 1