REVISION

REV	DESCRIPTION	DRAWN	APPR	DATE
1	Initial Registration	T.J.KIM	J.H.YOUN	2016. 07. 19.
2	형상 및 길이 변경	S.L.SON	J.H.YOUN	2016. 11. 25.
3	PIN 형상 변경	S.L.SON	J.H.YOUN	2019. 08. 07.
4	조립공차 ±0.1 -> ±0.2 변경	S.Y.EUN	I.C.KIM	2020. 05. 12.
5	PIN 치수 변경 (Ø5.0 => Ø5.2)	K.S.KIM	S.L.SON	2022. 12. 29.

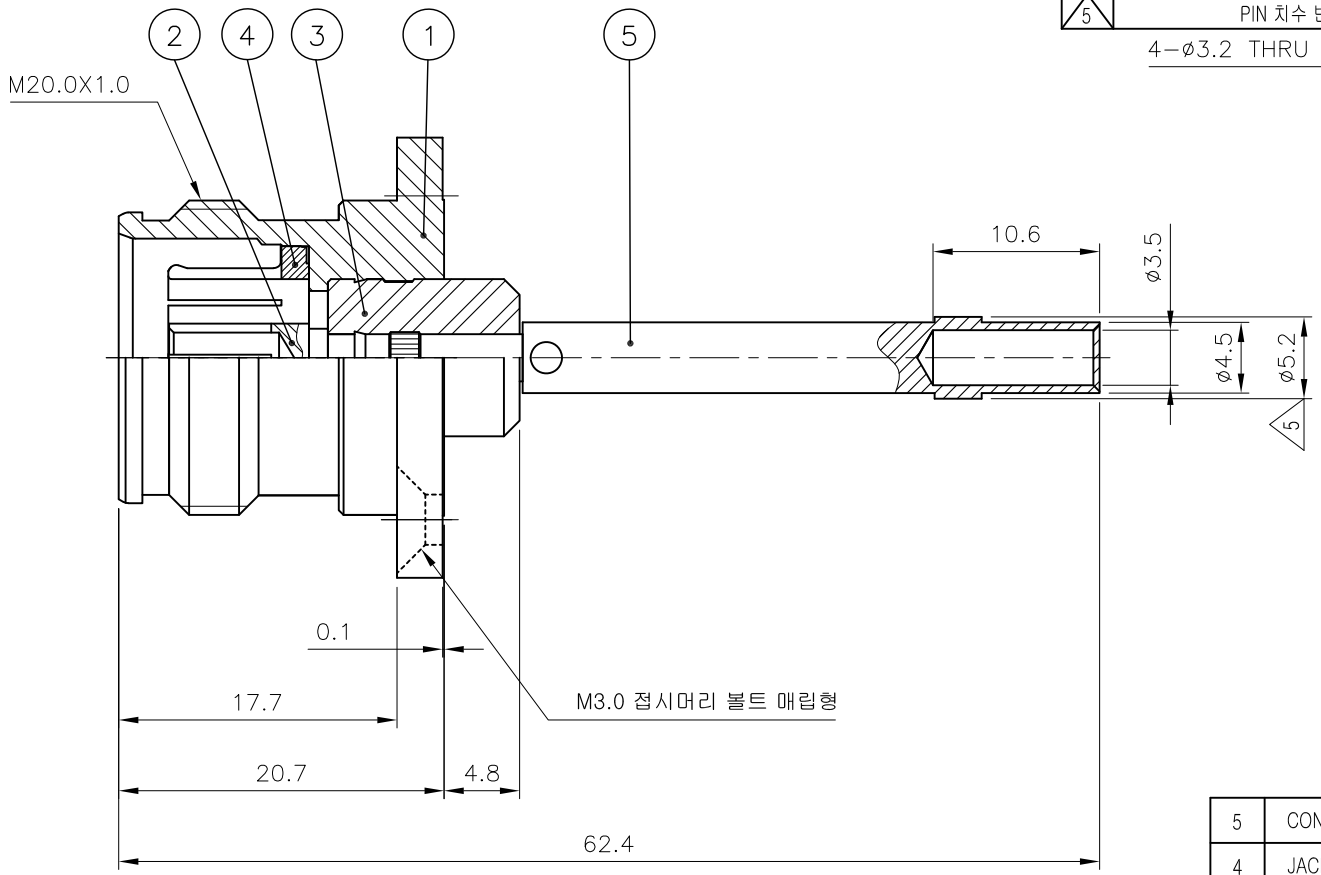

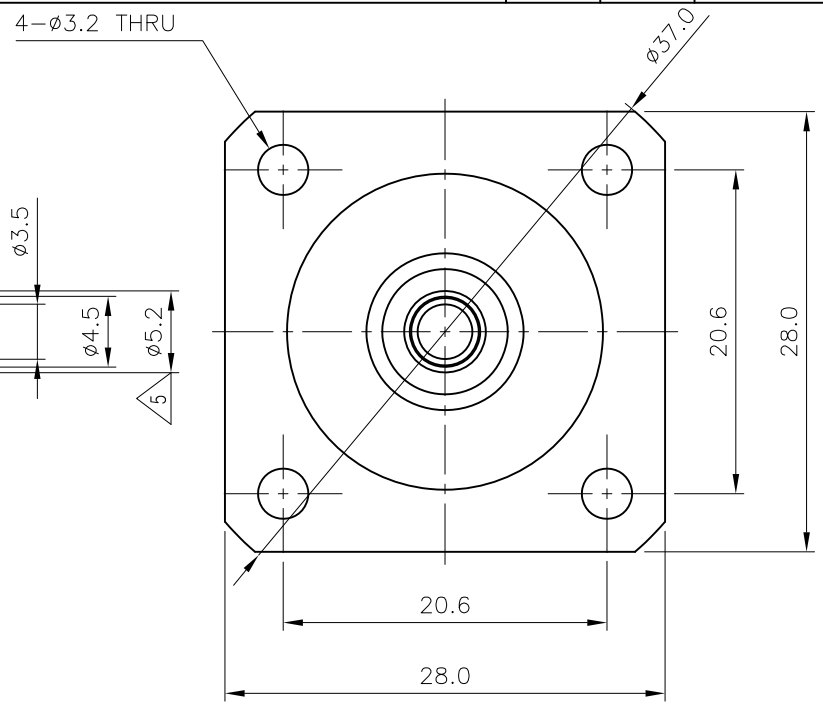

NO.	DESCRIPTION	Q'TY	MATERIAL	PLATING	CODE
5	CONTACT	1	MBsBD C3604BD-F	Silver Plate (3㎛)	DCT03731-5/3
4	JACK	1	MBsBD C3604BD-F	Silver Plate (3㎛)	DJA00228-5/6
3	INSULATOR	1	TEFLON		DIN02919-N/1
2	CONTACT	1	BeCu C17300	Silver Plate (5㎛)	DCT03729-5/2
1	BODY	1	MBsBD C3604BD-F	SUCO Plate (3㎛)	DBD04187-5/2

TOLERANCE	Decimal ±0.2	DATE	2022. 12. 29.
	Angle ±1°	APPROVED BY	S.L.SON
MATERIAL		CHECKED BY	S.L.SON
		DRAWN BY	K.S.KIM
FINISH		SCALE 2/1	UNIT mm

KJ COMTECH
KJ COMTECH CO.,LTD.
RF & MICROWAVE TECHNOLOGY
Tel : 82-32-347-8015
Fax : 82-32-347-8017

TITLE
4.3-10 DC BLOCK JS-4H

A4

DWG NO. CN03635-7/5

REVISION 5

SHEET 1 of 1