REVISION				
REV	DESCRIPTION	DRAWN	APPR	DATE
IR	Initial Registration	I.C.KIM		2016. 05. 25.
1	Jack 텐션 조정 및 PIN 커팅 (4->6) 수정	I.C.KIM		2016. 08. 11.
2	[설변처리No.201704-0011] JACK 표준화 적용 CODE로 변경	I.C.KIM		2017. 04. 27.
3	[설변처리No.201705-0010] 고객 요청에 의한 END CAP 추가	S.Y.EUN	I.C.KIM	2017. 05. 29.

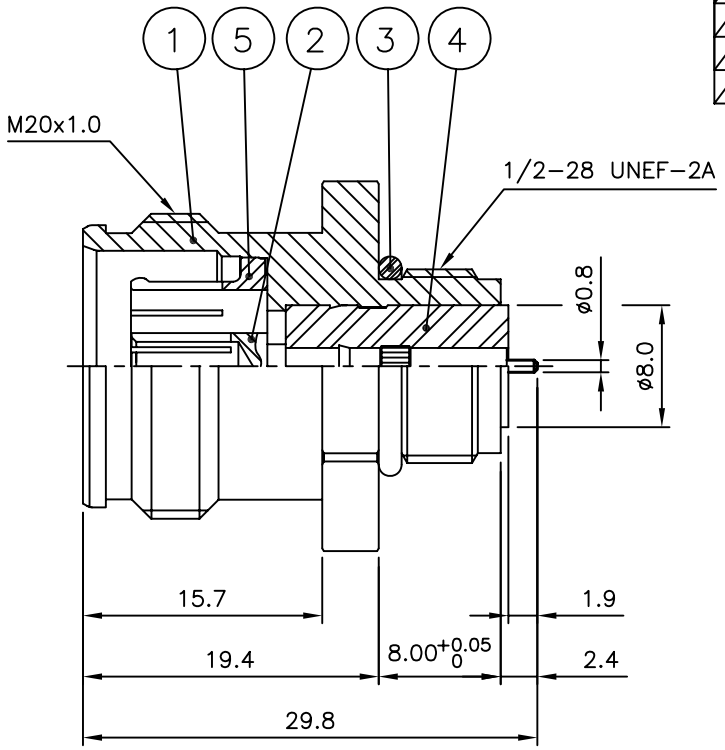

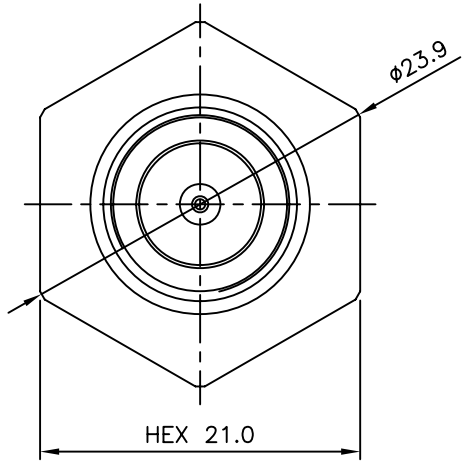

웨이브텍

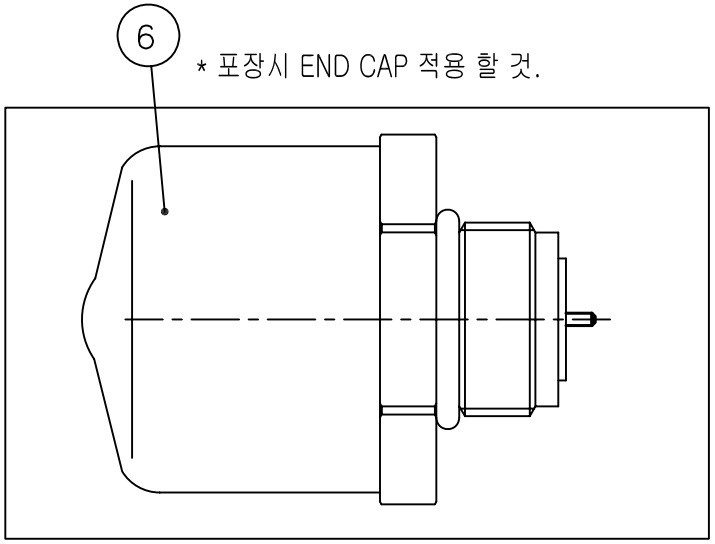

* 포장시 END CAP 적용 할 것.

	NO.	DESCRIPTION	Q'TY	MATERIAL	PLATING	CODE
3	6	END CAP	1	PVC	RED	DGK00224-N/3
2 1	5	JACK	1	MBsBD C3604BD-F	Silver Plate (3㎛)	DJA00228-5/6 ~~DJA00228-5/5~~
	4	INSULATOR	1	TEFLON		DIN02772-N/1
	3	GASKET	1	SILICONE RUB		DGK00121-N/1
1	2	CONTACT	1	BeCu C17300	Silver Plate (5㎛)	DCT03698-5/2 ~~DCT03698-5/1~~
	1	BODY	1	MBsBD C3604BD-F	SUCO Plate (3㎛)	DBD04165-5/1

TOLERANCE	Decimal ±0.1	DATE	2017. 05. 29.
	Angle ±1°	APPROVED BY	I.C.KIM
		CHECKED BY	
MATERIAL		DRAWN BY	S.Y.EUN
FINISH		SCALE 2/1	UNIT mm

KJ COMTECH
KJ COMTECH CO.,LTD.
RF & MICROWAVE TECHNOLOGY
Tel : 82-32-347-8015
Fax : 82-32-347-8017

TITLE
4.3-10 DIN50 SOLDER END JB (F/F)

A4 | DWG NO. CN03601-7/6 | REVISION 3 | SHEET 1 of 1