REVISION				
REV	DESCRIPTION	DRAWN	APPR	DATE
IR	Initial Registration	I.C.KIM		2015. 01. 18.

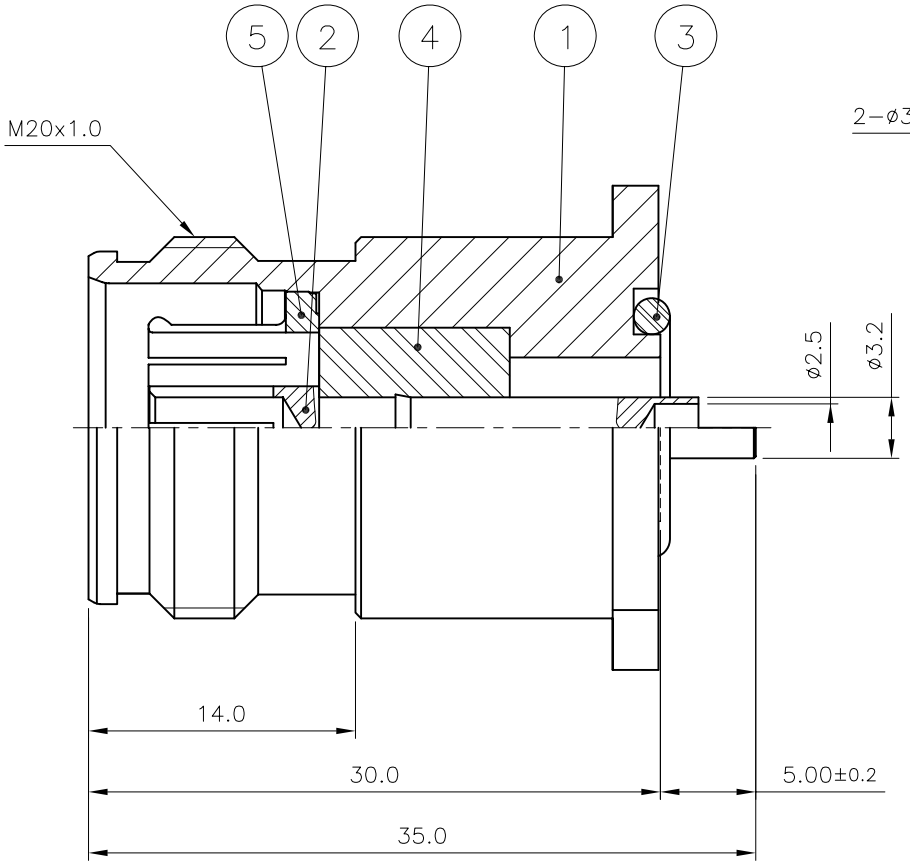

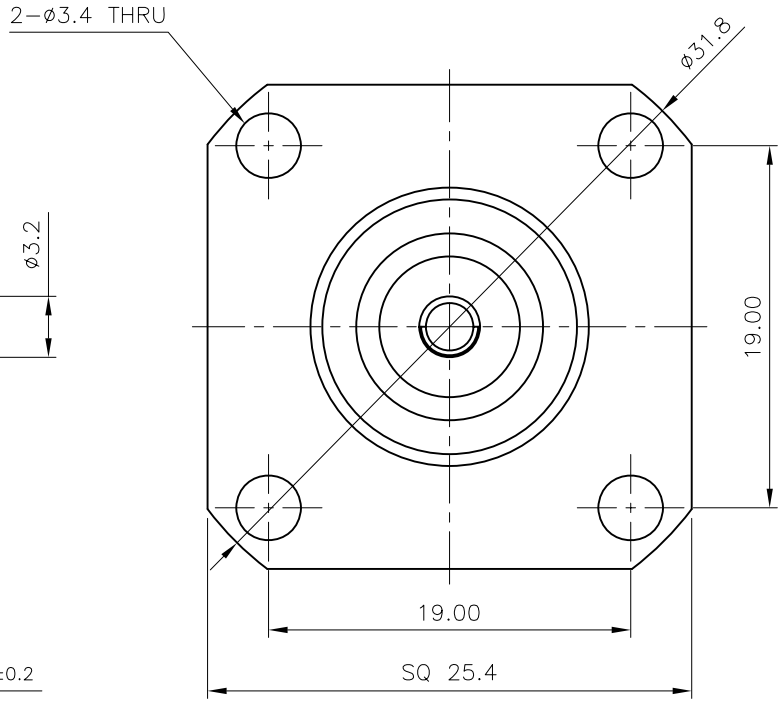

NO.	DESCRIPTION	Q'TY	MATERIAL	PLATING	CODE
5	JACK	1	MBsBD C3604BD-F	Silver Plate	DJA00228-5/1
4	INSULATOR	1	TEFLON		DIN02716-N/1
3	GASKET	1	SILICONE RUB		DGK00033-N/1
2	CONTACT	1	BeCu C17300	Silver Plate (3㎛)	DCT03628-5/1
1	BODY	1	MBsBD C3604BD-F	SUCO Plate	DBD04108-5/1

TOLERANCE	Decimal ±0.1	DATE	2015. 01. 18.
	Angle ±1°	APPROVED BY	
		CHECKED BY	
MATERIAL		DRAWN BY	I.C.KIM
FINISH		SCALE 2.5/1	UNIT mm

KJ COMTECH
KJ COMTECH CO.,LTD.
RF & MICROWAVE TECHNOLOGY
Tel : 82-32-347-8015
Fax : 82-32-347-8017

TITLE
4.3-10 SOLDER END JS-4H

A4

DWG NO. CN03547-7/1

REVISION I R

SHEET 1 of 1