REVISION				
REV	DESCRIPTION	DRAWN	APPR	DATE
IR	Initial Registration	I.C.KIM		2021.06.30.

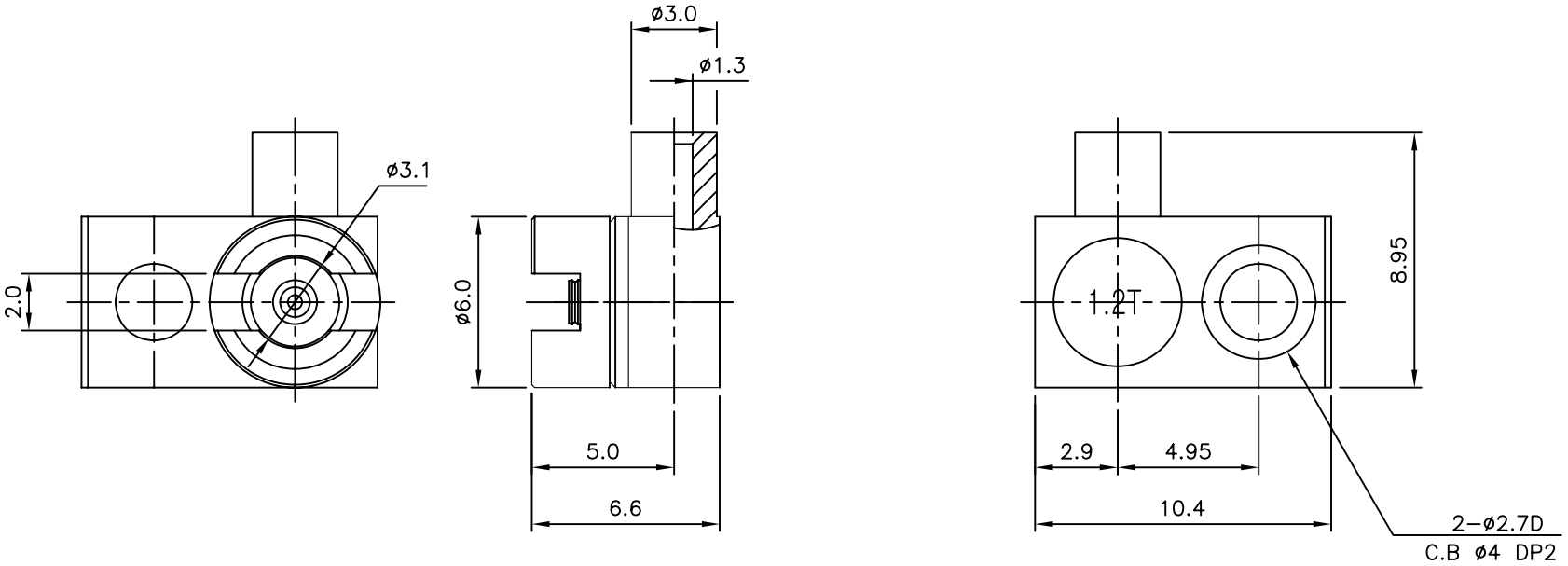

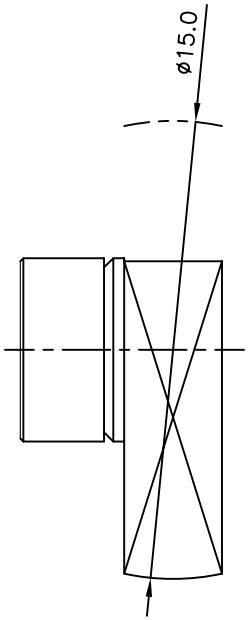

NO.		DESCRIPTION	Q'TY	MATERIAL	PLATING	CODE	
6		GUIDE COVER	1	MBsBD C3604BD-F	Nickel Plate	DCO00127-5/6	
5		COVER	1	MBsBD C3604BD-F	Nickel Plate	DCO00020-5/2	
4		INSULATOR	1	TEFLON		DIN00921-N/1	
3		INSULATOR	1	TEFLON		DIN03048-N1	
2		CONTACT	1	MBsBD C3604BD-F	Gold Plate	DCT03534-5/4	
1	1-2	BODY	1	MBsBD C3604BD-F	Nickel Plate	DBB00420-3/9	DBD03906-5/7
	1-1	BODY	1	SUS	Nickel Plate		DBD03985-5/8

TOLERANCE	Decimal ±0.1	DATE	2021. 06. 30.
	Angle ±1°	APPROVED BY	
		CHECKED BY	
MATERIAL	———	DRAWN BY	I.C.KIM
FINISH	———	SCALE 4/1	UNIT mm

KJ COMTECH
KJ COMTECH CO.,LTD.
RF & MICROWAVE TECHNOLOGY
Tel : 82-32-347-8015
Fax : 82-32-347-8017

TITLE GIGA LANE(1.2t) CABLE JL-2H RF-ø1.37

A4 | DWG NO. CN03457-7/C | REVISION I R | SHEET 1 of 1