REVISION

REV	DESCRIPTION	DRAWN	APPR	DATE
IR	Initial Registration	H.J.LEE	I.C.KIM	2015.03.20.
1	[설변No.201504-0010] 업체 요청으로 인한 GASKET 제거	H.J.LEE	I.C.KIM	2015.04.28.
2	[설변No.201602-0012] 업체 요청으로 인한 GASKET 등록	H.J.LEE	I.C.KIM	2016.02.17.
3	[설변No.201806-0002] QMA 표준화 치수 변경	S.Y.EUN	I.C.KIM	2018.06.07.

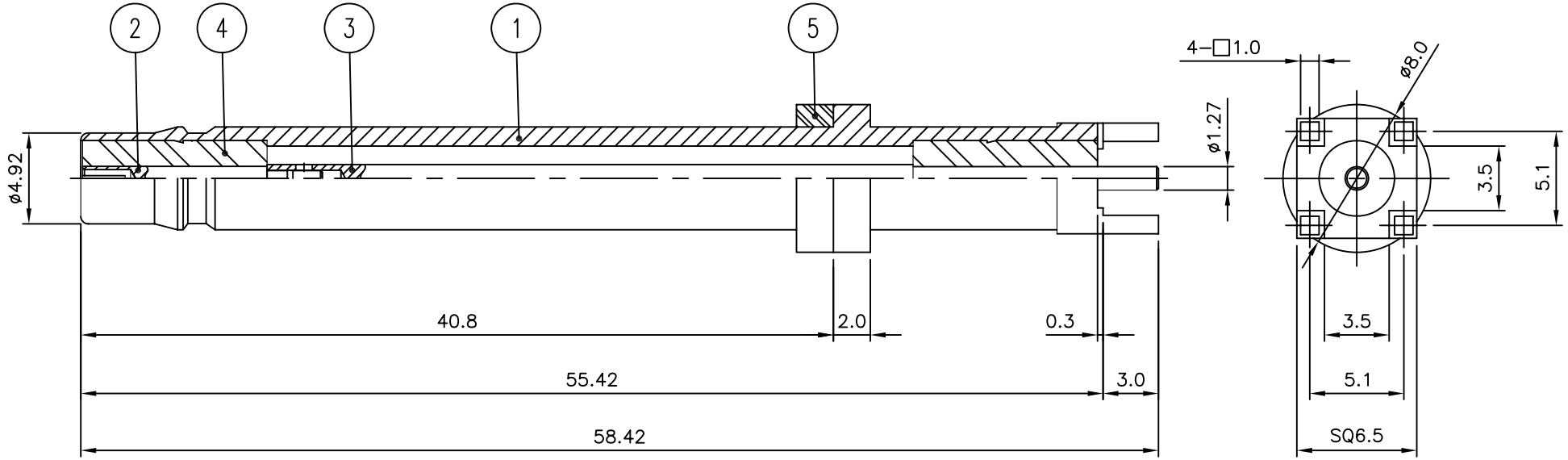

	NO.	DESCRIPTION	Q'TY	MATERIAL	PLATING	CODE
2 1	5	EMI CASKET	1	Carbon	BLACK	DGK00251-N/1
	4	INSULATOR	2	TEFLON		DIN01014-N/1
	3	CONTACT	1	MBsBD C3604BD-F	Gold Plate	DCT03456-5/1
	2	CONTACT	1	BeCu C17300	Gold Plate	DCT03317-5/2
3	1	BODY	1	MBsBD C3604BD-F	Nickel Plate	DBD03924-5/2 ~~DBD03924-5/1~~

TOLERANCE	Decimal ±0.1	DATE	2018. 06. 07.
	Angle ±1°	APPROVED BY	I.C.KIM
		CHECKED BY	
MATERIAL		DRAWN BY	S.Y.EUN
FINISH		SCALE 3/1	UNIT mm

KJ COMTECH
KJ COMTECH CO.,LTD.
RF & MICROWAVE TECHNOLOGY
Tel : 82-32-347-8015
Fax : 82-32-347-8017

TITLE: KQMA50 PCB JS-4R

A4 | DWG NO. CN03415-7/2 | REVISION 3 | SHEET 1 of 1