REVISION				
REV	DESCRIPTION	DRAWN	APPR	DATE
I R	Initial Registration	H.J.LEE	I.C.KIM	2015.03.03.

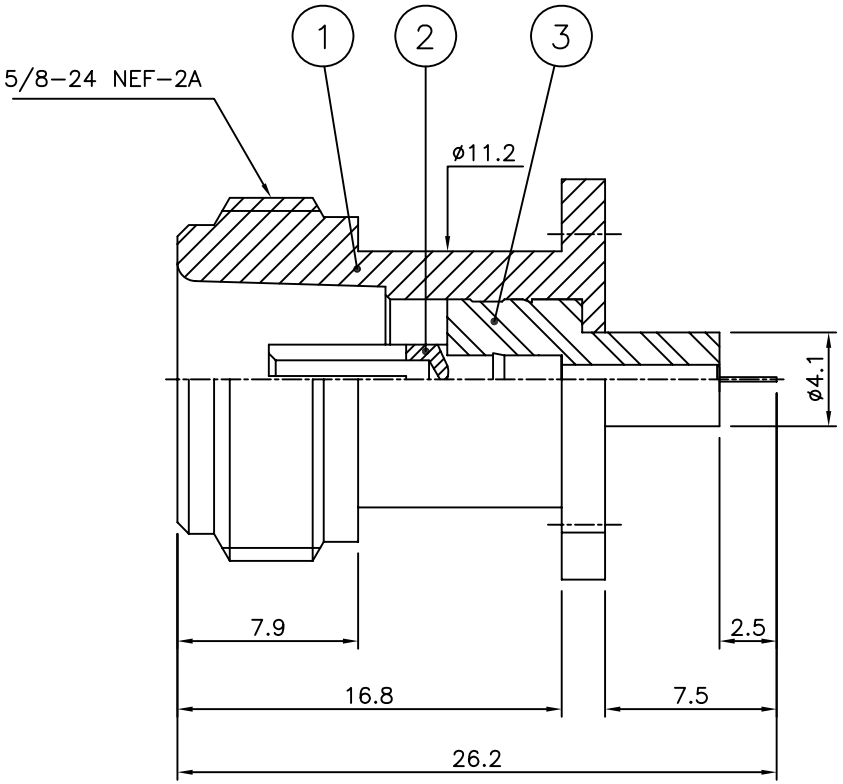

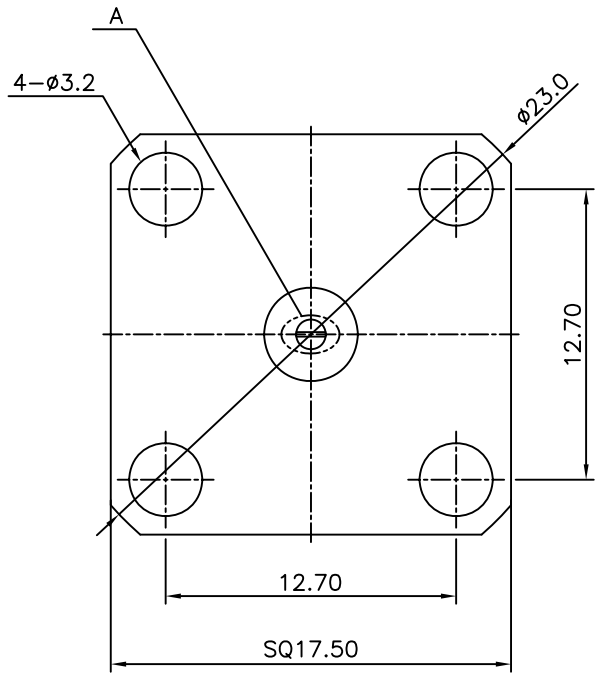

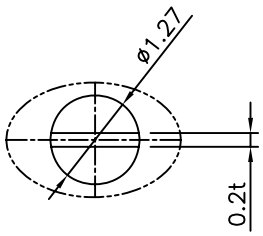

확대도 "A"

NO.	DESCRIPTION	Q'TY	MATERIAL	PLATING	CODE
3	INSULATOR	1	TEFLON		DIN02103-N/1
2	CONTACT	1	BeCu	Gold Plate	DCT03427-5/1
1	BODY	1	MBsBD	Nickel Plate	DBD01510-5/2

TOLERANCE	Decimal ±0.2	DATE	2015. 03. 03
	Angle ±1°	APPROVED BY	I. C. KIM
		CHECKED BY	
MATERIAL	-	DRAWN BY	H. J. LEE
FINISH	-	SCALE 3/1	UNIT mm

KJ COMTECH
KJ COMTECH CO.,LTD.
RF & MICROWAVE TECHNOLOGY
Tel : 82-32-347-8015
Fax : 82-32-347-8017

TITLE
N50-SOLDER END JS-4H

A4
DWG NO. CN03396-7/1
REVISION I R
SHEET 1 of 1