REVISION				
REV	DESCRIPTION	DRAWN	APPR	DATE
IR	Initial Registration	I.C.KIM		2015.05.07.

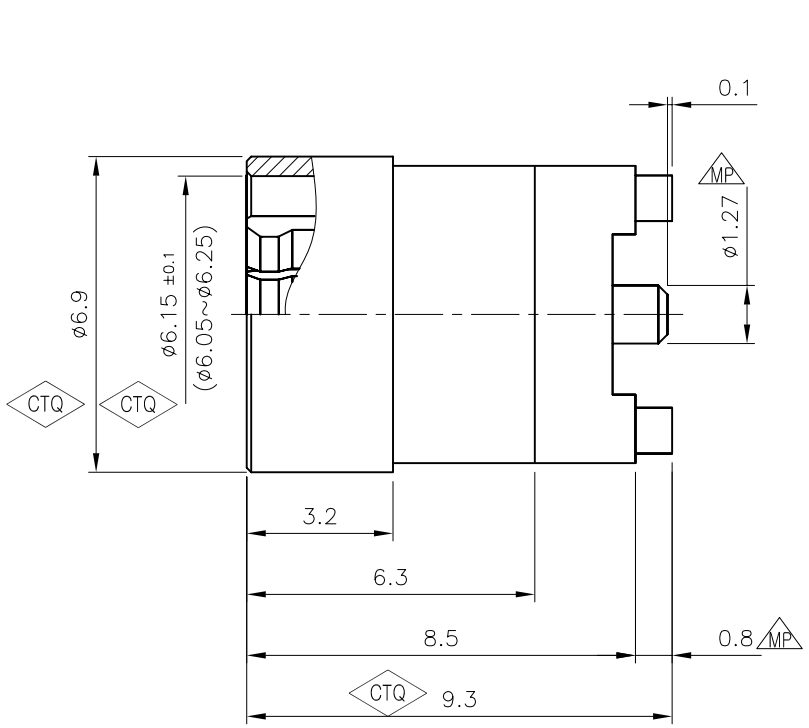

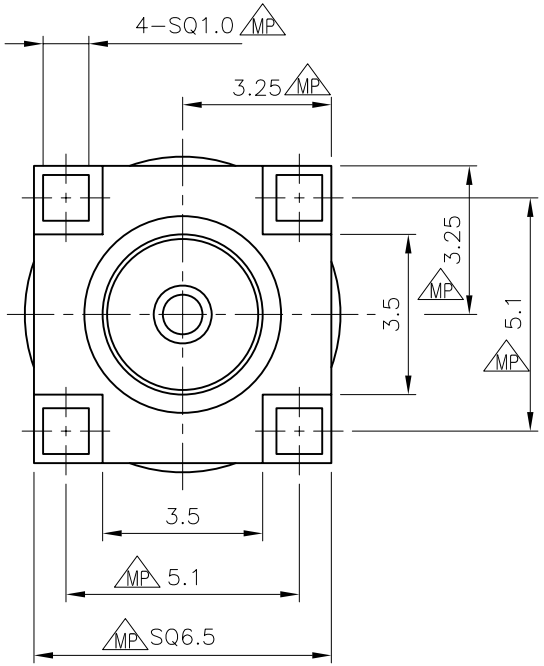

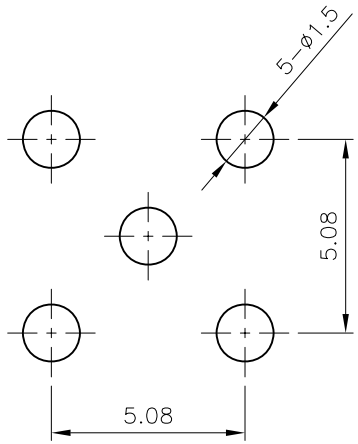

PCB MOUNTING HOLE SIZE

NOTE

1. 도금 사양 MP
   - -BODY : 하지 Ni (2㎛~10㎛)
     Gold (0.06㎛~2㎛)
   - -CONTACT : 하지 Ni (2㎛~10㎛)
     Gold (0.06㎛~2㎛)
   - -JACK : 하지 Ni (2㎛~10㎛)
     Gold (0.06㎛~2㎛)
2. 기재한 관리 공차외에 치수는 일반공차 적용

NO.	DESCRIPTION	Q'TY	MATERIAL	PLATING	CODE
4	JACK	1	MBsBD	Note 참조	DJA00159-5/6
3	INSULATOR	1	TEFLON		DIN02593-N/1
2	CONTACT	1	BeCu	Note 참조	DCT03484-5/1
1	BODY	1	MBsBD	Note 참조	DBD03911-5/1

TOLERANCE	Decimal ±0.1	DATE	2015. 05. 07.
	Angle ±1°	APPROVED BY	
		CHECKED BY	
MATERIAL		DRAWN BY	I.C.KIM
FINISH		SCALE 6/1	UNIT mm

KJ COMTECH
KJ COMTECH CO.,LTD.
RF & MICROWAVE TECHNOLOGY
Tel : 82-32-347-8015
Fax : 82-32-347-8017

TITLE
SMBL50 PCB JS-4R

A4

DWG NO. CN03313-7/7

REVISION I R

SHEET 1 of 1