REVISION				
REV	DESCRIPTION	DRAWN	APPR	DATE
IR	Initial Registration	E.H.KIM	I.C.KIM	2014.09.29.
1	가공성 개선으로 인한 바디 PCB 사각 사이즈 변경	S.Y.EUN	I.C.KIM	2021.10.29.

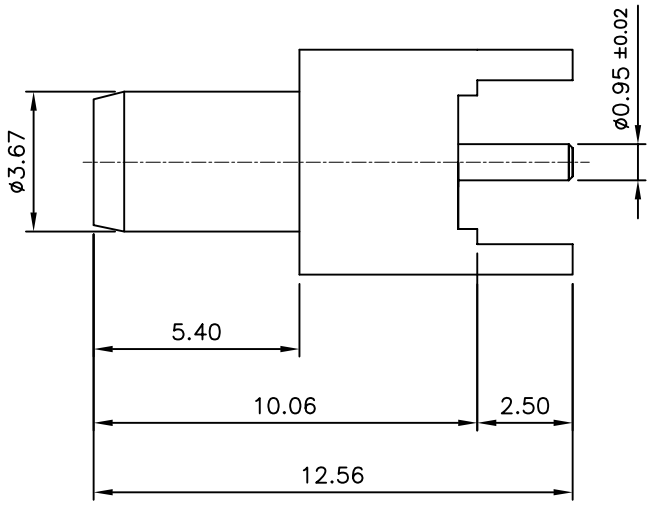

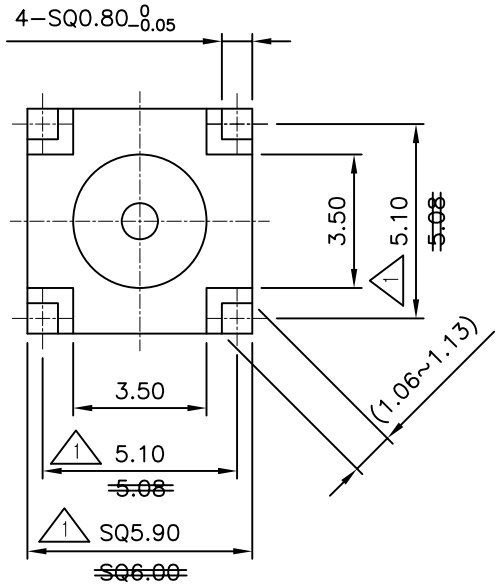

NO.	DESCRIPTION	Q'TY	MATERIAL	PLATING	CODE
3	INSULATOR	1	TEFLON		DIN02449-N/1
2	CONTACT	1	MBsBD C3604BD-F	Gold Plate	DCT03222-5/1
1 (1)	BODY	1	MBsBD C3604BD-F	Nickel Plate	DBD03718-5/1

TOLERANCE	Decimal ±0.1	DATE	2021. 10. 29.
	Angle ±1°	APPROVED BY	I.C.KIM
		CHECKED BY	
MATERIAL		DRAWN BY	S.Y.EUN
FINISH		SCALE 5/1	UNIT mm

KJ COMTECH
KJ COMTECH CO.,LTD.
RF & MICROWAVE TECHNOLOGY
Tel : 82-32-347-8015
Fax : 82-32-347-8017

TITLE
SMB50 trans (Ø3.67) PCB JS-4R

A4 | DWG NO. CN03287-7/1 | REVISION 1 | SHEET 1 of 1