REVISION				
REV	DESCRIPTION	DRAWN	APPR	DATE
IR	Initial Registration	I.C.KIM	I.C.KIM	2014.07.16.
1	[설변No.201409-0007] 업체요청 (BODY 외형 변경,CONTACT 길이변경)	E.H.KIM	I.C.KIM	2014.09.23.
2	[설변No.201503-0010] BODY 메이팅 부 치수 변경	H.J.LEE	I.C.KIM	2015.06.19.

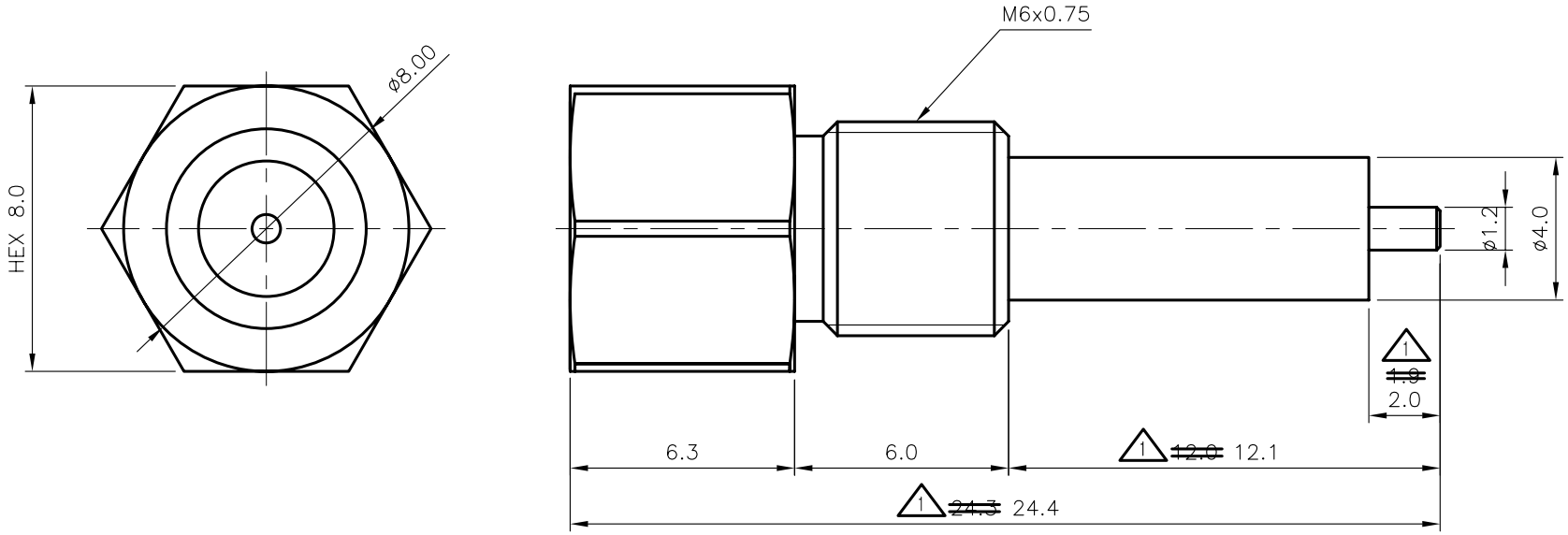

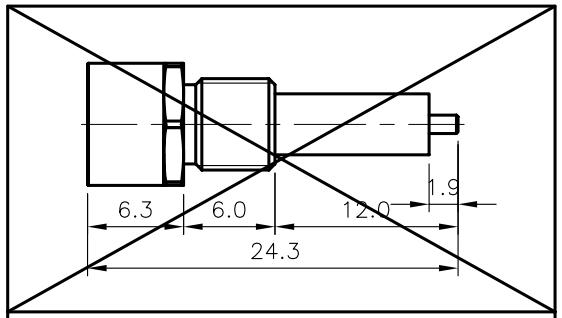

1 설변 전 REV. IR

NO.	DESCRIPTION	Q'TY	MATERIAL	PLATING	CODE
3	INSULATOR	1	TEFLON		DIN02418-N/1
1 2	CONTACT	1	BeCu C17300	Silver Plate	DCT03172-5/2 ~~DCT03172-5/1~~
2 1	BODY	1	MBsBD C3604BD-F	SUCO Plate	DBD03671-5/2 ~~DBD03671-5/1~~

TOLERANCE	Decimal ±0.1	DATE	2015. 06. 19.
	Angle ±1°	APPROVED BY	I.C.KIM
		CHECKED BY	
MATERIAL	-	DRAWN BY	H.J.LEE
FINISH	-	SCALE 5/1	UNIT mm

KJ COMTECH
KJ COMTECH CO.,LTD.
RF & MICROWAVE TECHNOLOGY
Tel : 82-32-347-8015
Fax : 82-32-347-8017

TITLE
SMP50 MAX SOLDER END PB (F/F)

A4

DWG NO. CN03258-7/2

REVISION 2

SHEET 1 of 1