REVISION				
REV	DESCRIPTION	DRAWN	APPR	DATE
IR	Initial Registration	H.J.LEE	I.C.KIM	2015.01.20.
1	[설변No.201506-0020] PIN 내경 치수 변경	H.J.LEE	I.C.KIM	2015.06.19.

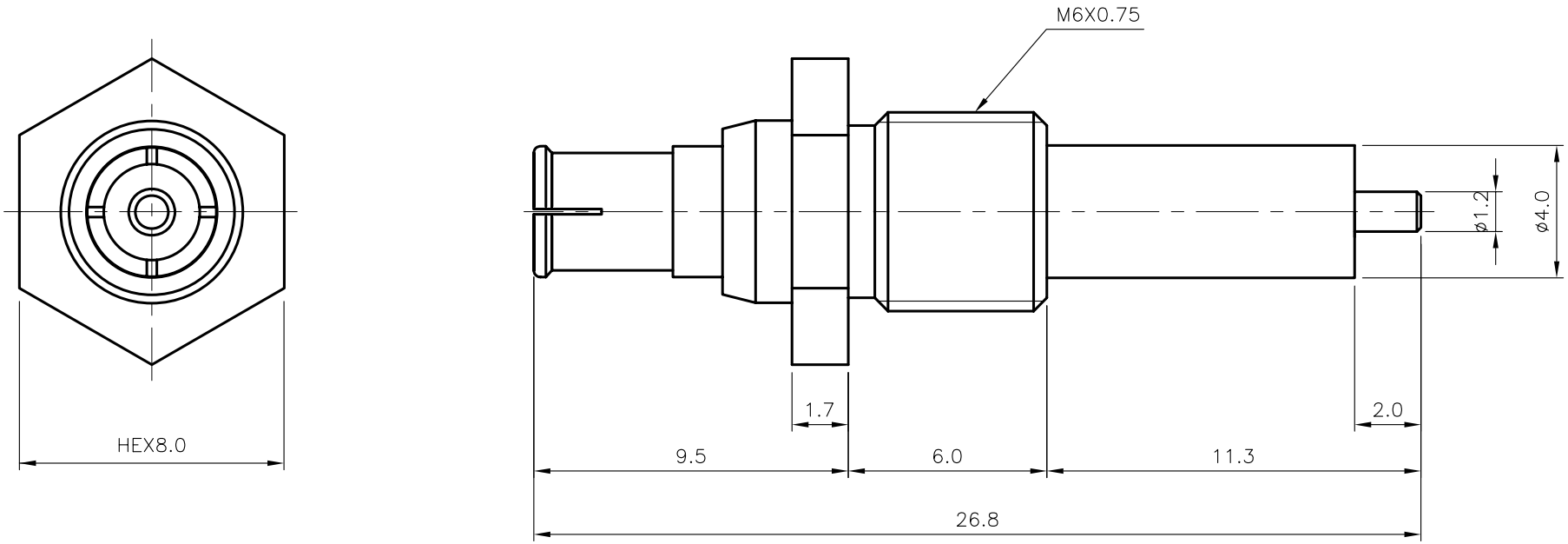

NO.	DESCRIPTION	Q'TY	MATERIAL	PLATING	CODE
3	INSULATOR	1	TEFLON		DIN02532-N/1
2	CONTACT	1	BeCu	Silver Plate	DCT03171-5/2
1	BODY	1	BeCu	SUCO Plate	DBD03670-5/3

TOLERANCE	Decimal ±0.1	DATE	2015. 06. 19.
	Angle ±1°	APPROVED BY	I.C.KIM
		CHECKED BY	
MATERIAL	-	DRAWN BY	H.J.LEE
FINISH	-	SCALE 5/1	UNIT mm

KJ COMTECH
KJ COMTECH CO.,LTD.
RF & MICROWAVE TECHNOLOGY
Tel : 82-32-347-8015
Fax : 82-32-347-8017

TITLE
SMP MAX SOLDER END PB (F/F)

A4

DWG NO. CN03257-7/2

REVISION 1

SHEET 1 of 1