REVISION				
REV	DESCRIPTION	DRAWN	APPR	DATE
IR	Initial Registration	M.H.SONG	I.C.KIM	2014.07.23.
1	[설변처리No.201504-0002] 메이팅부 치수 표준화 적용	H.J.LEE	I.C.KIM	2015. 04. 23.
2	[설변처리No.201601-0009] COVER 눌림 현상 발생으로 높이 치수 변경 및 면취 추가	H.J.LEE	I.C.KIM	2016.01.13.
3	[설변처리No.201605-0012] COVER 조립시 BURR가 생겨 쇼트 발생으로 COVER 변경	H.J.LEE	I.C.KIM	2016.05.25.
4	[설변처리No.201709-0004] PIN MATING 접촉 개선으로 인한 치수 변경	S.Y.EUN	I.C.KIM	2017.10.17.

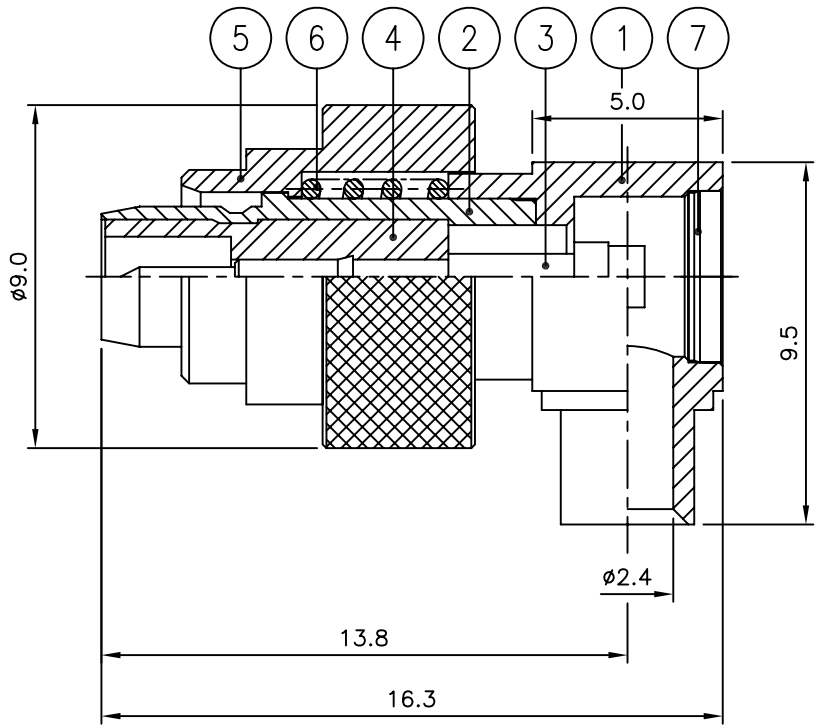

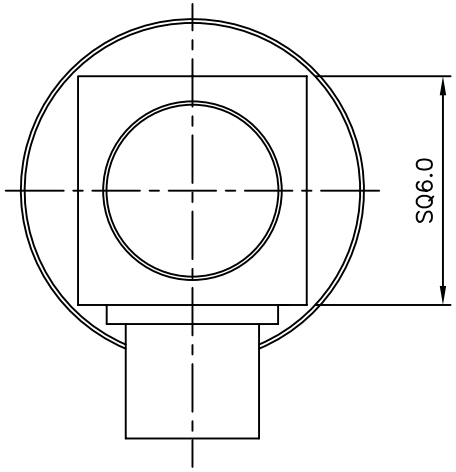

	NO.	DESCRIPTION	Q'TY	MATERIAL	PLATING	CODE
3	7	COVER	1	MBsBD	Nickel Plate	DCO00111-5/1 ~~DCO00020-5/2~~
	6	SPRING	1	SUS	Passivate	DSR01102-5/1
1	5	CAP	1	MBsBD	Nickel Plate	DCU02233-5/2
	4	INSULATOR	1	TEFLON		DIN02021-N/1
4	3	CONTACT	1	MBsBD	Gold Plate	DCT02946-5/3 ~~DCT02946-5/1~~
	2	BODY	1	MBsBD	Nickel Plate	DBD03456-5/2
2	1	BODY	1	MBsBD	Nickel Plate	DBD03457-5/1

TOLERANCE	Decimal ±0.1	DATE	2017. 10. 17.
	Angle ±1°	APPROVED BY	I.C.KIM
		CHECKED BY	-
MATERIAL		DRAWN BY	S.Y.EUN
FINISH		SCALE 5/1	UNIT mm

KJ COMTECH
KJ COMTECH CO.,LTD.
RF & MICROWAVE TECHNOLOGY
Tel : 82-32-347-8015
Fax : 82-32-347-8017

TITLE
SMBL50 CABLE PL 085

A4

DWG NO. CN03097-7/5

REVISION 4

SHEET 1 of 1