REVISION				
REV	DESCRIPTION	DRAWN	APPR	DATE
IR	Initial Registration	M.H.SONG	I.C.KIM	2013.12.02.
1	[설변No.201810-0003] 원가절감 및 MATING 개선으로 인한 링 삭제	S.Y.EUN	I.C.KIM	2018.10.10.
2	[설변No.202006-0005] 메이팅 표준화로 인한 링 재추가	S.Y.EUN	I.C.KIM	2020.06.17.

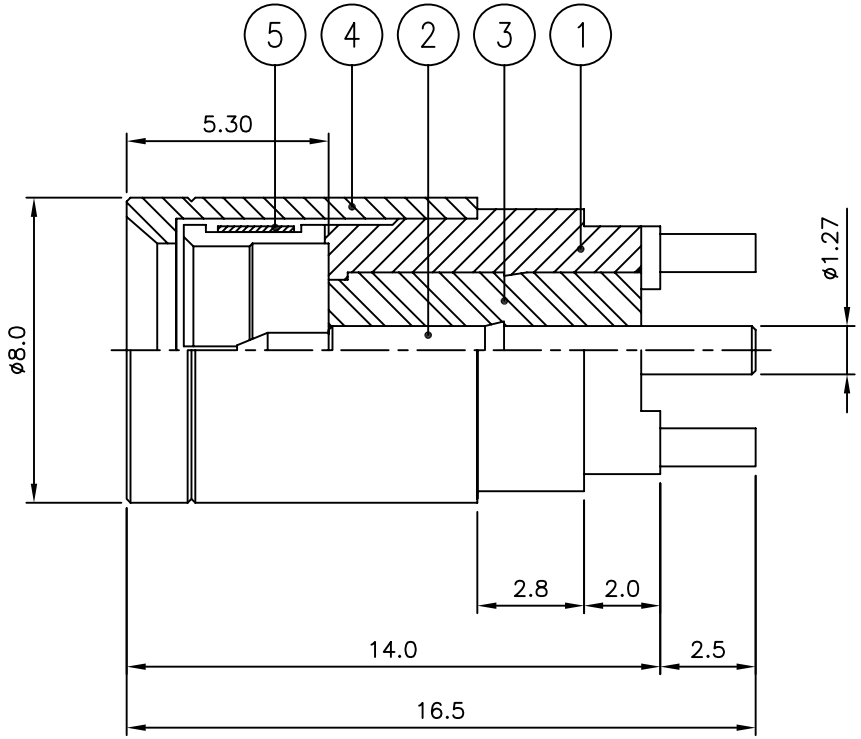

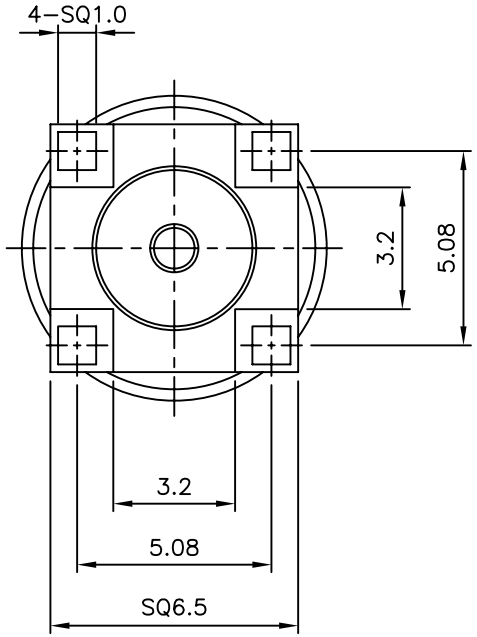

NO.	DESCRIPTION	Q'TY	MATERIAL	PLATING	CODE
5	SPRING RING	1	BeCu	Nickel Plate	DSR00007-5/1
4	CAP	1	MBsBD	Nickel Plate	DCU02226-5/1
3	INSULATOR	1	TEFLON		DIN02288-N/1
2	CONTACT	1	MBsBD	Gold Plate	DCT02997-5/1
1	BODY	1	MBsBD	Nickel Plate	DBD03496-5/1

TOLERANCE	Decimal ±0.1	DATE	2020. 06. 17.
	Angle ±1°	APPROVED BY	I.C.KIM
		CHECKED BY	
MATERIAL		DRAWN BY	S.Y.EUN
FINISH		SCALE 5/1	UNIT mm

KJ COMTECH
KJ COMTECH CO.,LTD.
RF & MICROWAVE TECHNOLOGY
Tel : 82-32-347-8015
Fax : 82-32-347-8017

TITLE
PDM(ø5.5) PCB PS-4R

A4

DWG NO. CN03086-7/2

REVISION 2

SHEET 1 of 1