REVISION				
REV	DESCRIPTION	DRAWN	APPR	DATE
IR	Initial Registration	S.H.KIM		2023. 07. 10.

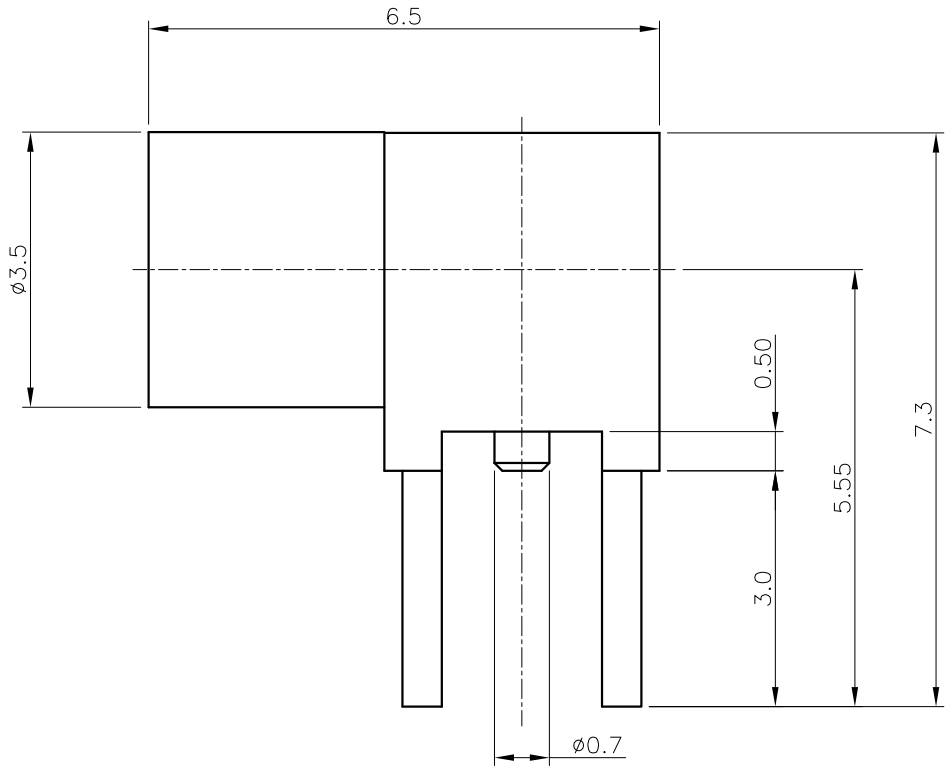

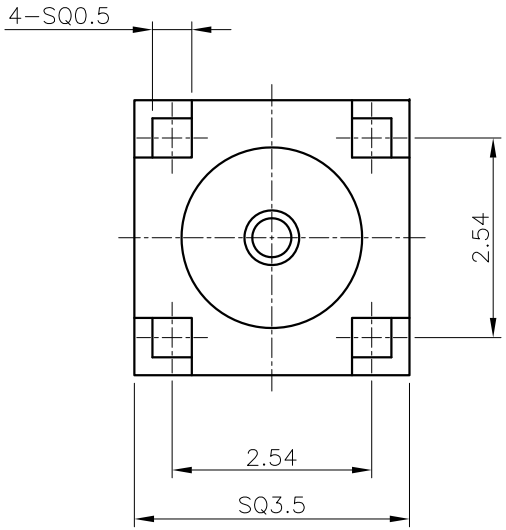

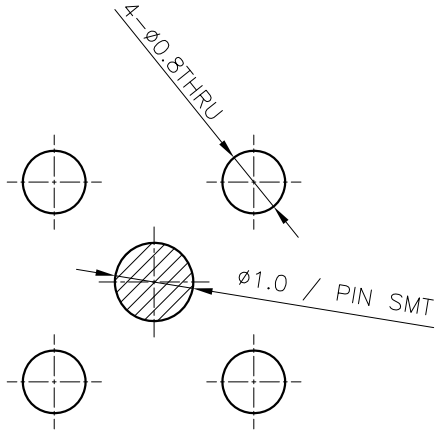

PCB MOUNTING HOLE SIZE

NO.	DESCRIPTION	Q'TY	MATERIAL	PLATING	CODE
5	INSULATOR	1	TEFLON	White	DIN02249-N/1
4	INSULATOR	1	TEFLON	White	DIN02248-N/1
3	CONTACT	1	BeCu C17300	Gold Plate	DCT04393-5/1
2	BODY B	1	MBsBD C3604BD-F	Gold Plate	DBD04911-5/1
1	BODY A	1	MBsBD C3604BD-F	Gold Plate	DBD04910-5/1

TOLERANCE	Decimal ±0.2	DATE	2023. 07. 10.
	Angle ±1°	APPROVED BY	
		CHECKED BY	
MATERIAL		DRAWN BY	S.H.KIM
FINISH		SCALE 5/1	UNIT mm

KJ COMTECH
KJ COMTECH CO.,LTD.

RF & MICROWAVE TECHNOLOGY
Tel : 82-32-347-8015
Fax : 82-32-347-8017

TITLE MMCX50 PCB JL-4R

A4 DWG NO. CN03081-7/2
REVISION I R SHEET 1 of 1