REVISION

REV	DESCRIPTION	DRAWN	APPR	DATE
IR	Initial Registration	E.H.KIM	I.C.KIM	2013.05.06.
1	[설변처리No.201306-0009] 기타 (와셔 삭제)	E.H.KIM	I.C.KIM	2013.06.18.
2	[설변처리 No.201504-0003] JACK 표준화 치수 적용 BOM구성 변경	H.J.LEE	I.C.KIM	2015.04.07.

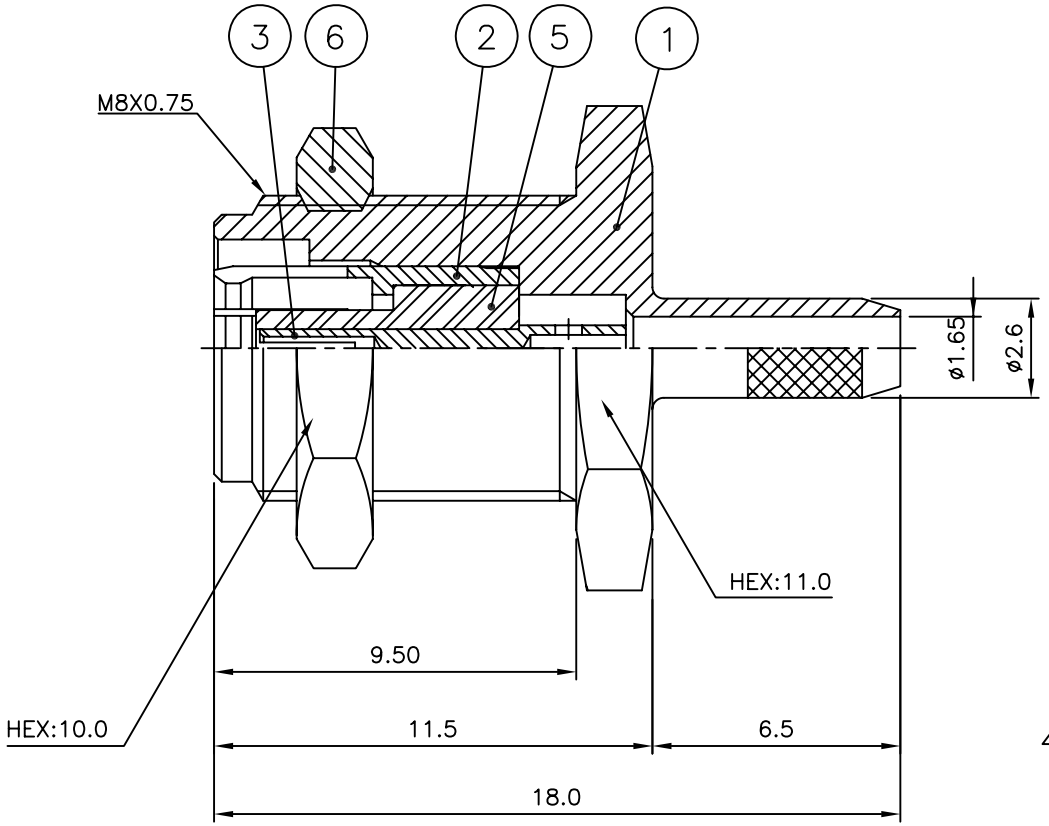

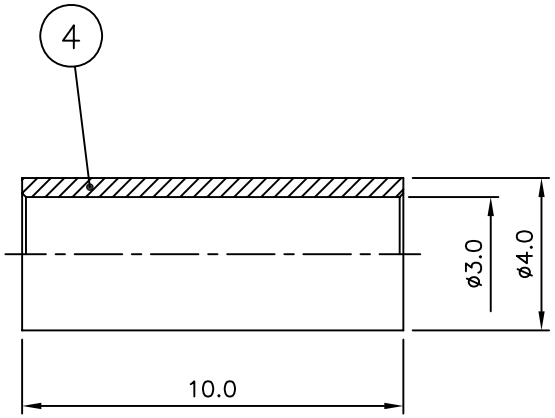

NO.	DESCRIPTION	Q'TY	MATERIAL	PLATING	CODE
~~7~~	~~WASHER~~	~~1~~	~~MBsBD~~	~~Nickel Plate~~	~~DWA00009-5/2~~
6	NUT	1	MBsBD	Nickel Plate	DNT00082-5/1
5	INSULATOR	1	TEFLON		DIN02179-N/1
4	FERRULE	1	MBsBD	Nickel Plate	DFE00034-5/1
3	CONTACT	1	BeCu	Gold Plate	DCT02834-5/1
2	JACK	1	MBsBD	Nickel Plate	DJA00159-5/5 ~~DJA00159-5/2~~
1	BODY	1	MBsBD	Nickel Plate	DBD03326-5/1

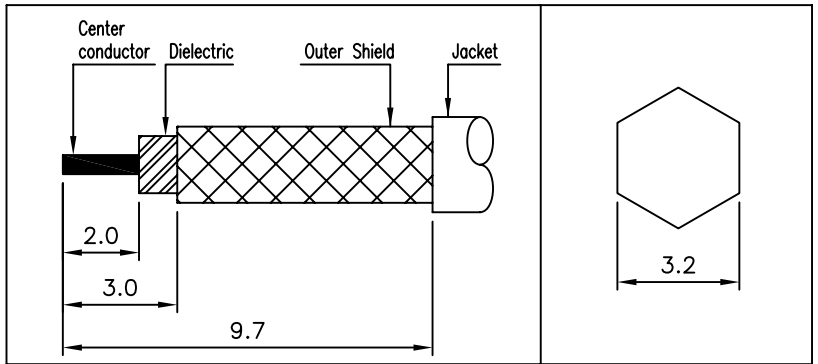

CABLE STRIP | CRIMP TOOL

TOLERANCE	Decimal ±0.1	DATE	2017. 01. 06.
	Angle ±1°	APPROVED BY	I.C.KIM
MATERIAL		CHECKED BY	C.K.KIM
		DRAWN BY	G.Y.KIM
FINISH		SCALE 5/1	UNIT mm

KJ COMTECH
KJ COMTECH CO.,LTD.
RF & MICROWAVE TECHNOLOGY
Tel : 82-32-347-8015
Fax : 82-32-347-8017

TITLE: SMBL50 CABLE JB(F/N) FLS-98N(=SIFS)

A4 | DWG NO. CN02985-7/1 | REVISION 2 | SHEET 1 of 1