REVISION				
REV	DESCRIPTION	DRAWN	APPR	DATE
I R	초도작성	I.C.KIM	I.C.KIM	2013.03.11.

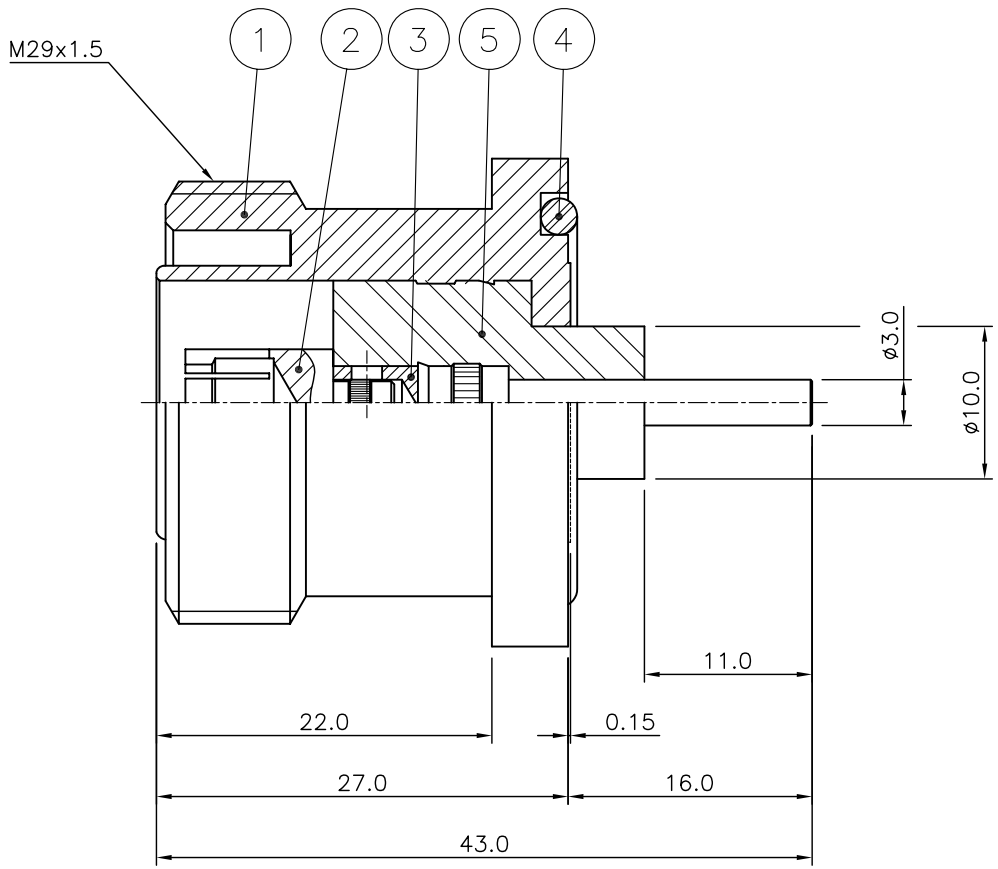

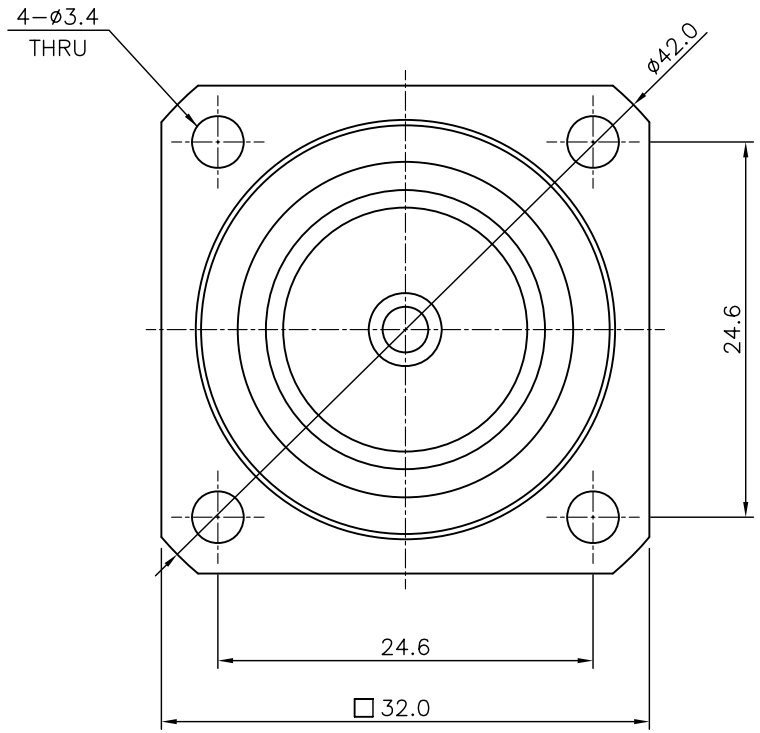

NO.	DESCRIPTION	Q'TY	MATERIAL	PLATING	CODE
5	INSULATOR	1	TEFLON		DIN02147-N/1
4	GASKET	1	SILICONE RUB	RED	DGK00199-N/1
3	CONTACT	1	MBsBD	Silver Plate 3μm	DCT02782-5/1
2	CONTACT	1	BeCu	Silver Plate 3μm	DCT02783-5/1
1	BODY	1	MBsBD	SUCO Plate (3μm)	DBD03273-5/1

TOLERANCE	Decimal ±0.2	DATE	2013. 03. 11.
	Angle ±1°	APPROVED BY	I. C. KIM
		CHECKED BY	E. H. KIM
MATERIAL	-	DRAWN BY	I. C. KIM
FINISH	-	SCALE 2/1	UNIT mm

KJ COMTECH
KJ COMTECH CO.,LTD.
RF & MICROWAVE TECHNOLOGY
Tel : 82-32-347-8015
Fax : 82-32-347-8017

TITLE
7/16 DIN50 SOLDER END JS-4H

A4

DWG NO. CN02949-7/1

REVISION I R

SHEET 1 of 1