REVISION				
REV	DESCRIPTION	DRAWN	APPR	DATE
IR	Initial Registration	E.H.KIM	I.C.KIM	2013.02.13.

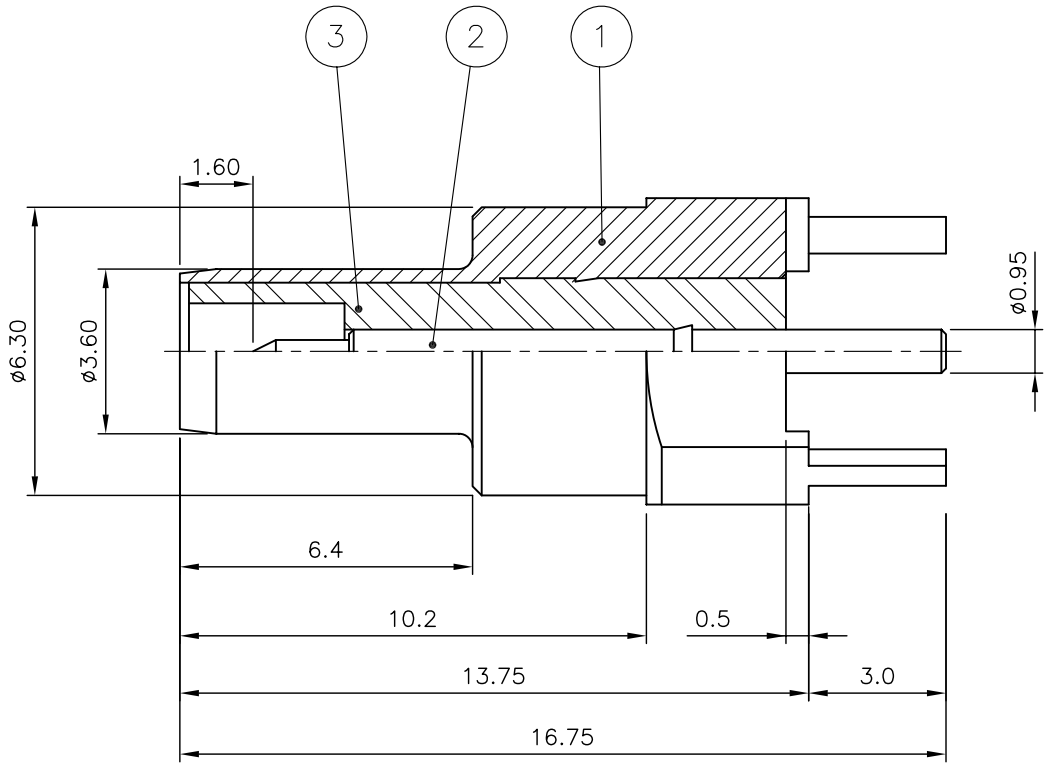

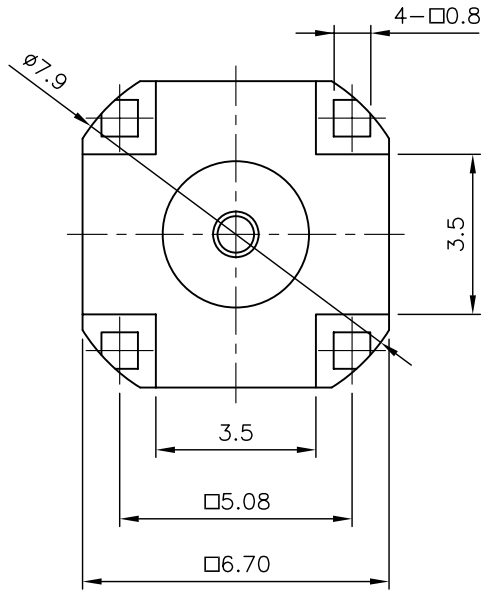

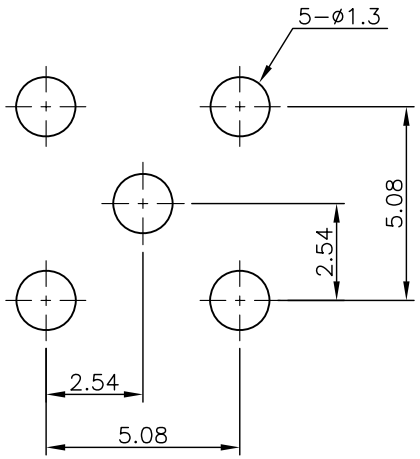

PCB MOUNTING HOLE

NO.	DESCRIPTION	Q'TY	MATERIAL	PLATING	CODE
3	INSULATOR	1	TEFLON		DIN02137-N/1
2	CONTACT	1	MBsBD	Gold Plate	DCT02766-5/1
1	BODY	1	MBsBD	Gold Plate	DBD03260-5/1

TOLERANCE	Decimal ±0.1	DATE	2013. 02. 13.
	Angle ±1°	APPROVED BY	I.C.KIM
		CHECKED BY	
MATERIAL		DRAWN BY	E.H.KIM
FINISH		SCALE 6/1	UNIT mm

KJ COMTECH
KJ COMTECH CO.,LTD.
RF & MICROWAVE TECHNOLOGY
Tel : 82-32-347-8015
Fax : 82-32-347-8017

TITLE
SMB50 Trans (Ø3.6) PCB JS-4R

A4 | DWG NO. CN02937-7/1 | REVISION I R | SHEET 1 of 1