REVISION				
REV	DESCRIPTION	DRAWN	APPR	DATE
I R	Initial Registration	E.H.KIM	I.C.KIM	2012.11.01.

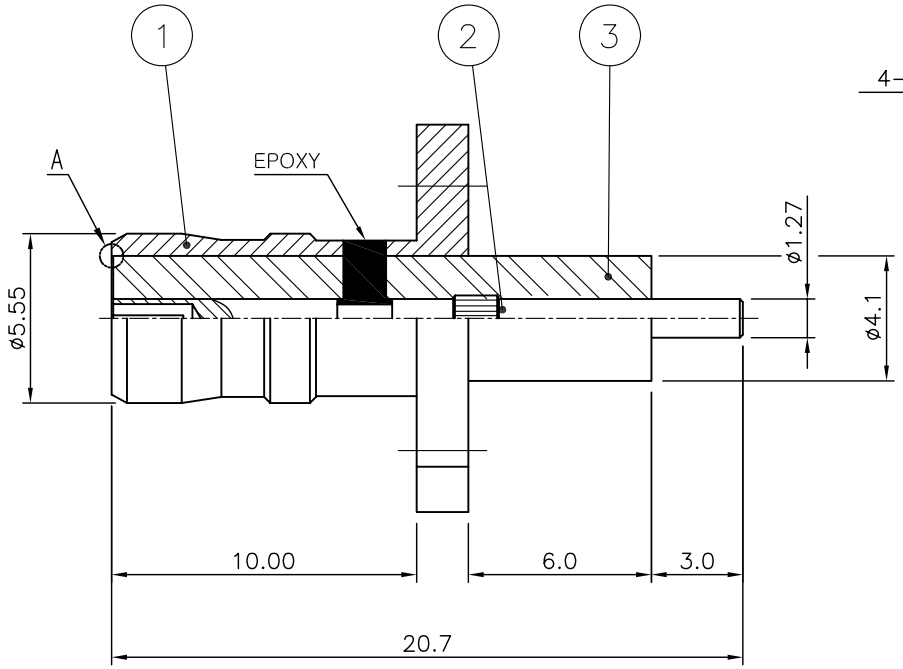

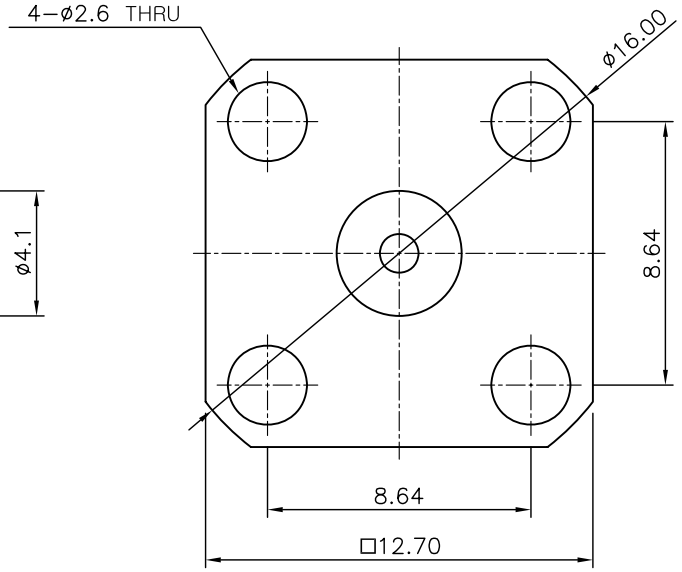

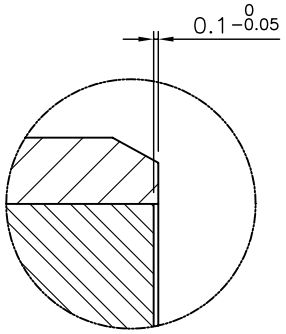

A부 확대도

NO.	DESCRIPTION	Q'TY	MATERIAL	PLATING	CODE
3	INSULATOR	1	TEFLON		DIN01513-N/1
2	CONTACT	1	BeCu	Gold Plate	DCT02693-5/1
1	BODY	1	SUS304	Passivated	DBD03183-5/1

TOLERANCE	Decimal ±0.2	DATE	2012. 11. 01.
	Angle ±1°	APPROVED BY	I. C. KIM
		CHECKED BY	
MATERIAL	-	DRAWN BY	E. H. KIM
FINISH	-	SCALE 4/1	UNIT mm

KJ COMTECH
KJ COMTECH CO.,LTD.
RF & MICROWAVE TECHNOLOGY
Tel : 82-32-347-8015
Fax : 82-32-347-8017

TITLE
SMA(F)TRANS (Ø5.55)-SOLDER END JS-4H

A4 | DWG NO. CN02883-7/1 | REVISION 1 | SHEET 1 of 1