REVISION				
REV	DESCRIPTION	DRAWN	APPR	DATE
IR	Initial Registration	S.Y.EUN	I.C.KIM	2019.10.01.

* ELECTRICAL SPECIFICATIONS
Impedance : 50Ω
Frequency Range : DC~13.5GHz
V.S.W.R (MAX) : 1.3 @ 12GHz
1.35 @ 13.5GHz
* MECHANICAL DATA
Coupling nut torque : 0.9~1.2 Nm

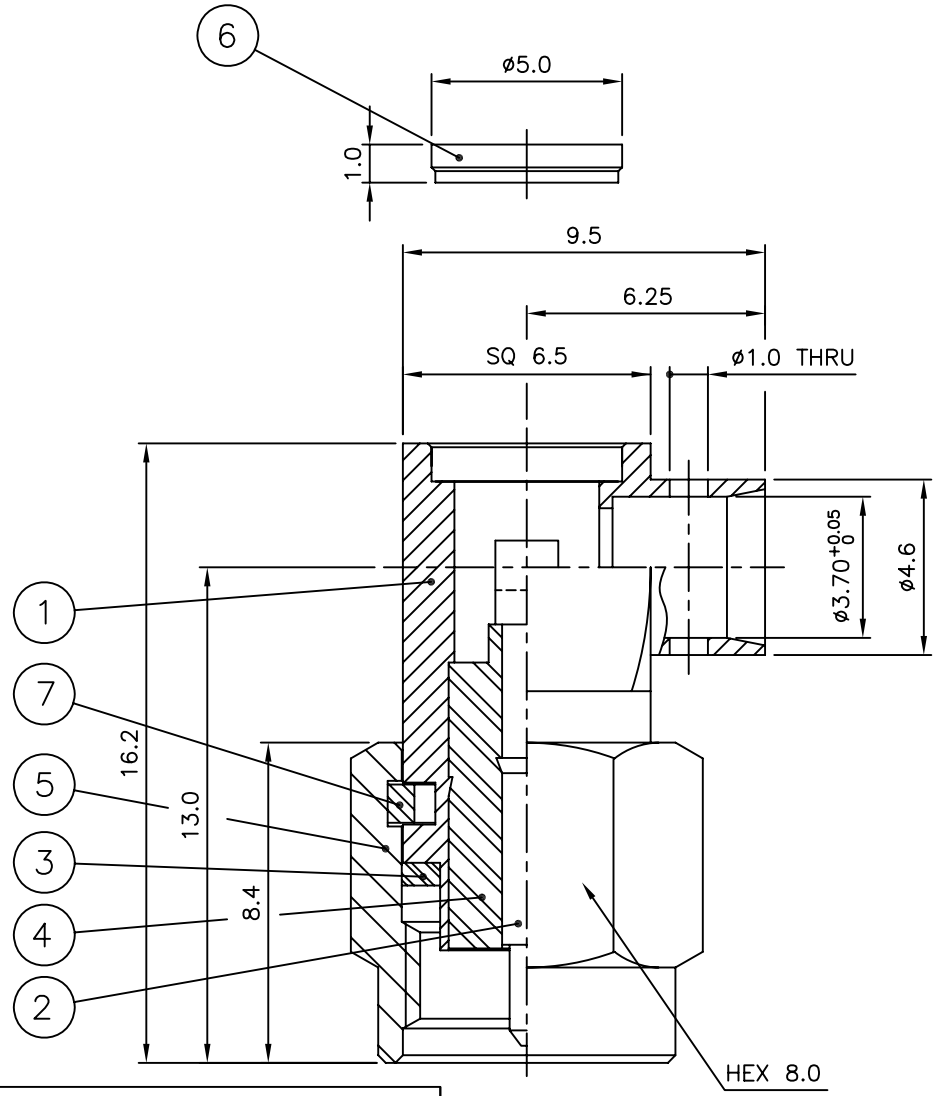

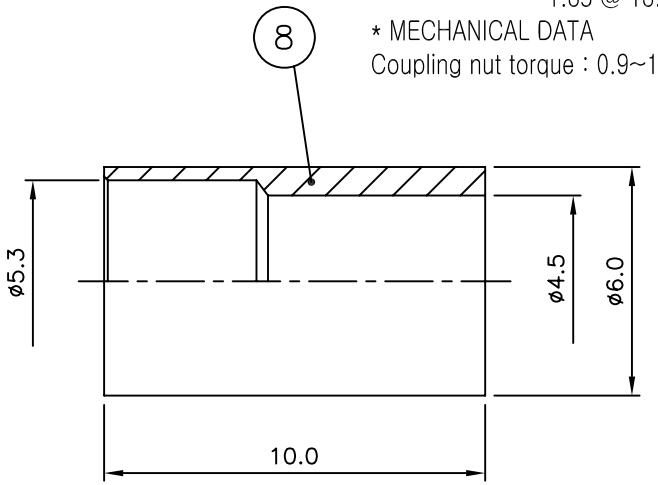

NO.	DESCRIPTION	Q'TY	MATERIAL	PLATING	CODE
8	FERRULE	1	MBsBD C3604BD-F	NIckel Plate	DFE00162-5/1
7	SPRING RING	1	Stainless steel 304	Passivated	DSR00002-5/1
6	COVER	1	BRASS	Nickel Plated	DCO00096-5/3
5	CAP	1	BRASS	Nickel Plated	DCU00005-5/2
4	INSULATOR	1	PTFE		DIN02057-N/1
3	GASKET	1	SILICONE RUB		DGK00004-N/1
2	CONTACT	1	BRASS	Gold Plate	DCT02658-5/1
1	BODY	1	BRASS	Gold Plate	DBD03141-5/1

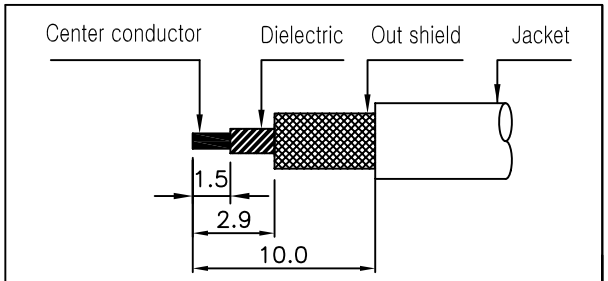

CABLE STRIP

TOLERANCE	Decimal ±0.1	DATE	2019. 10. 01.
	Angle ±1°	APPROVED BY	I.C.KIM
		CHECKED BY	
MATERIAL		DRAWN BY	S.Y.EUN
FINISH		SCALE 5/1	UNIT mm

KJ COMTECH
KJ COMTECH CO.,LTD.
RF & MICROWAVE TECHNOLOGY
Tel : 82-32-347-8015
Fax : 82-32-347-8017

TITLE
SMA50 CABLE PL 141MF

A4 | DWG NO. CN02845-7/3 | REVISION I R | SHEET 1 of 1