REVISION

REV	DESCRIPTION	DRAWN	APPR	DATE
IR	Initial Registration	I.C.KIM	I.C.KIM	2012.08.20.
1	[설변처리 No.201504-0002] 메이팅부 치수 표준화 적용	H.J.LEE	I.C.KIM	2015.04.07.
2	[설변처리 No.201907-0001] 억지끼움 불량으로 인한 바디 변경	S.Y.EUN	I.C.KIM	2019.07.01.

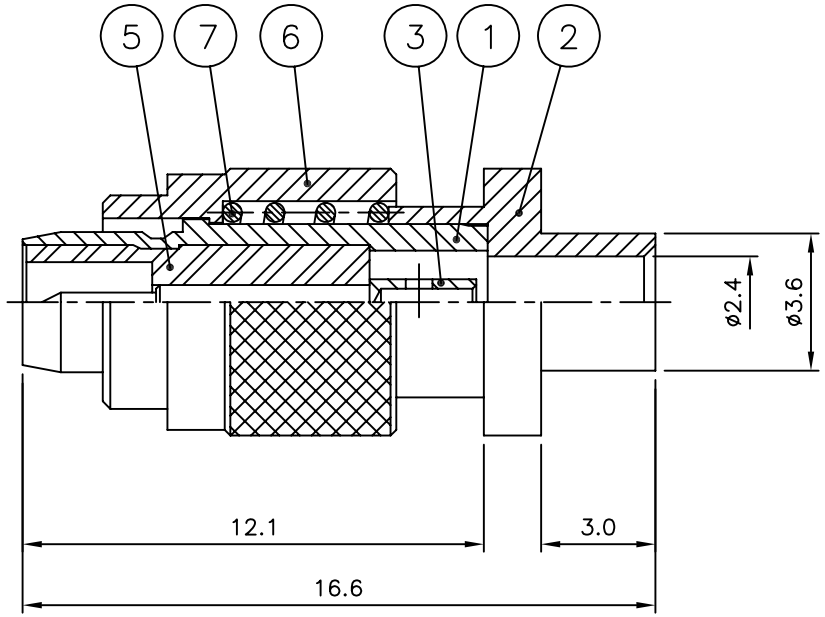

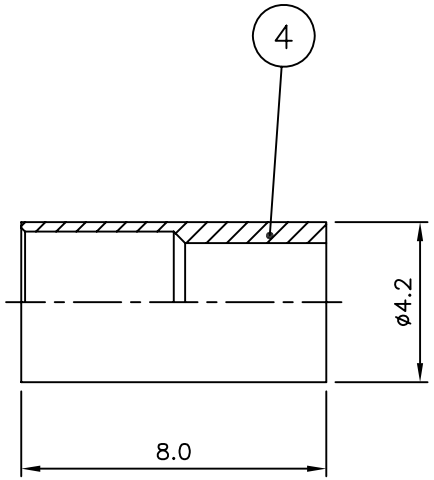

	NO.	DESCRIPTION	Q'TY	MATERIAL	PLATING	CODE
	7	SPRING	1	SUS	부동태처리	DSR01102-5/1
1	6	CAP	1	MBsBD	Nickel Plate	DCU02192-5/3
	5	INSULATOR	1	TEFLON		DIN02021-N/1
	4	FERRULE	1	MBsBD	Nickel Plate	DFE00166-5/1
	3	CONTACT	1	MBsBD	Gold Plate	DCT02613-5/1
2	2	BODY (B)	1	MBsBD	Nickel Plate	DBD03089-5/3 ~~DBD03089-5/2~~
1	1	BODY (A)	1	MBsBD	Nickel Plate	DBD03088-5/5 ~~DBD03088-5/3~~

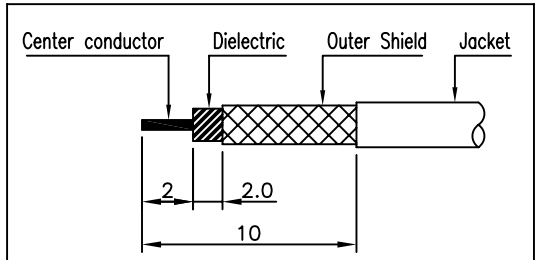

* CABLE 탈피도

TOLERANCE	Decimal ±0.2	DATE	2019. 07. 01.
	Angle ±1°	APPROVED BY	I.C.KIM
		CHECKED BY	
MATERIAL		DRAWN BY	S.Y.EUN
FINISH		SCALE 5/1	UNIT mm

KJ COMTECH
KJ COMTECH CO.,LTD.
RF & MICROWAVE TECHNOLOGY
Tel : 82-32-347-8015
Fax : 82-32-347-8017

TITLE: SMBL50 CABLE PS MF86

A4 | DWG NO. CN02814-7/3 | REVISION 2 | SHEET 1 of 1