REVISION				
REV	DESCRIPTION	DRAWN	APPR	DATE
IR	Initial Registration	S.H.KIM		2024. 09. 02.

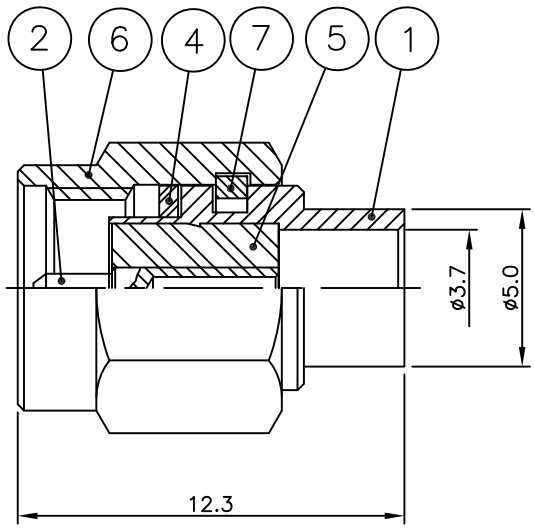

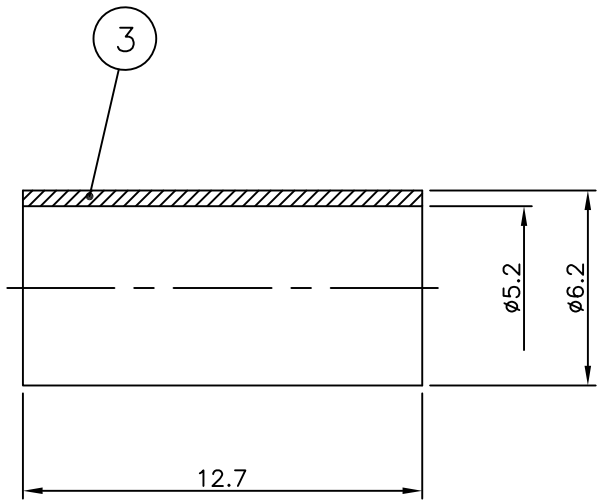

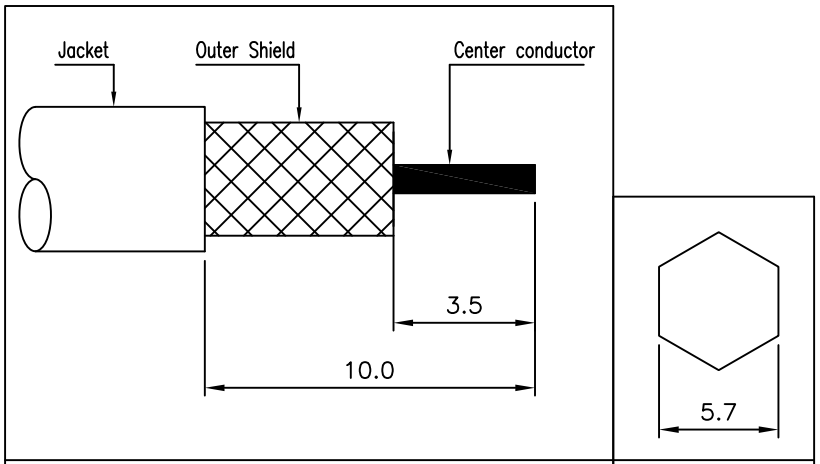

CABLE STRIPPING | CRIMP SIZE

NO.	DESCRIPTION	Q'TY	MATERIAL	PLATING	CODE
7	SPRING RING	1	SUS	부동태 처리	DSR00002-5/1
6	COUPLING CAP	1	MBsBD C3604BD-F	NIckel Plate	DCU00005-5/2
5	INSULATOR	1	TEFLON		DIN00173-N/1
4	GASKET	1	SILICONE RUB		DGK00004-N/1
3	FERRULE	1	MBsBD C3604BD-F	NIckel Plate	DFE00123-5/1
2	CONTACT	1	MBsBD C3604BD-F	Gold Plate	DCT00286-5/1
1	BODY	1	MBsBD C3604BD-F	Gold Plate	DBD03205-5/1

TOLERANCE	Decimal ±0.2	DATE	2024. 09. 02.
	Angle ±1°	APPROVED BY	
		CHECKED BY	
MATERIAL	-	DRAWN BY	S. H. KIM
FINISH	-	SCALE 4/1	UNIT mm

KJ COMTECH
KJ COMTECH CO.,LTD.
RF & MICROWAVE TECHNOLOGY
Tel : 82-32-347-8015
Fax : 82-32-347-8017

TITLE
SMA50 CABLE PS 141MFU(50Ω)

A4 | DWG NO. CN02764-7/C | REVISION I R | SHEET 1 of 1