REVISION				
REV	DESCRIPTION	DRAWN	APPR	DATE
IR	Initial Registration	I.C.KIM	J.H.YOUN	2012.02.13.
1	[설변No.201504-0006]BODY 표준화 치수 변경	H.J.LEE	I.C.KIM	2015.04.17.
2	[설변No.201806-0002] QMA 표준화 치수 변경	S.Y.EUN	I.C.KIM	2018.06.05.

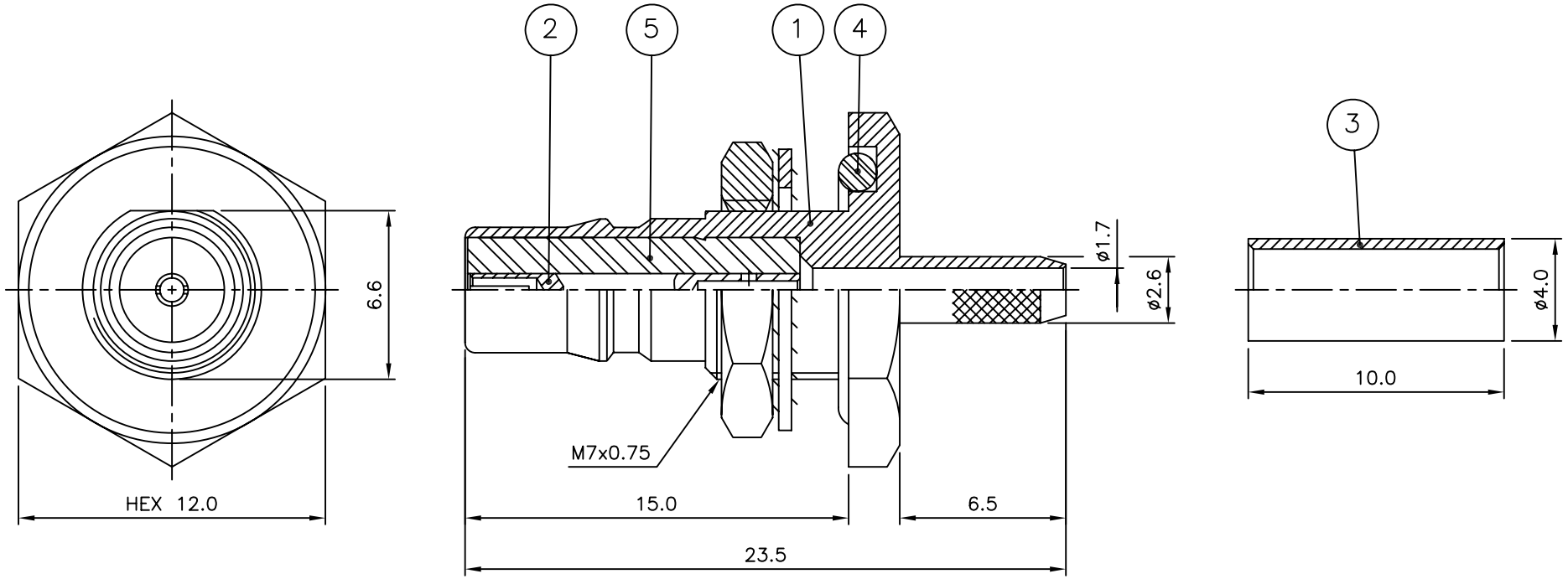

NO.	DESCRIPTION	Q'TY	MATERIAL	PLATING	CODE
7	WASHER	1	MBsBD	Gold Plate	DWA00010-5/2
6	NUT	1	MBsBD	Gold Plate	DNT00081-5/1
5	INSULATOR	1	TEFLON		DIN01129-N/1
4	GASKET	1	SILICONE RUB		DGK00024-N/1
3	FERRULE	1	MBsBD	Nickel Plate	DFE00034-5/1
2	CONTACT	1	BeCu	Gold Plate	DCT02551-5/1
1	BODY	1	MBsBD	Gold Plate	DBD03019-5/2

2 1

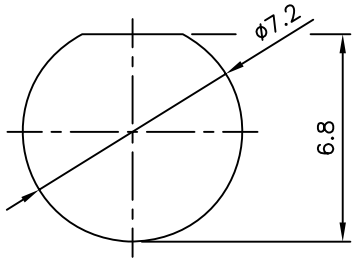

MOUNTING HOLE

* ELECTRICAL SPECIFICATIONS
Impedance : 50Ω
Frequency Range : DC~6GHz
V.S.W.R (Max) : 1.2
Insertion Loss : 0.2dB (Min)
Insulation resistance : 5000MΩ
Center contact resistance : ≤ 3mΩ
Outer contact resistance : ≤ 2.5mΩ

TOLERANCE	Decimal ±0.1	DATE	2018. 06. 05.
	Angle ±1°	APPROVED BY	I.C.KIM
		CHECKED BY	
MATERIAL	———	DRAWN BY	S.Y.EUN
FINISH	———	SCALE 4/1	UNIT mm

KJ COMTECH
KJ COMTECH CO.,LTD.
RF & MICROWAVE TECHNOLOGY
Tel : 82-32-347-8015
Fax : 82-32-347-8017

TITLE
KQMA50 CABLE JB (F/N) RG316

A4 | DWG NO. CN02741-7/3 | REVISION 2 | SHEET 1 of 1