REVISION				
REV	DESCRIPTION	DRAWN	APPR	DATE
IR	Initial Registration	I.C.KIM	J.H.YOUN	2011.12.06.

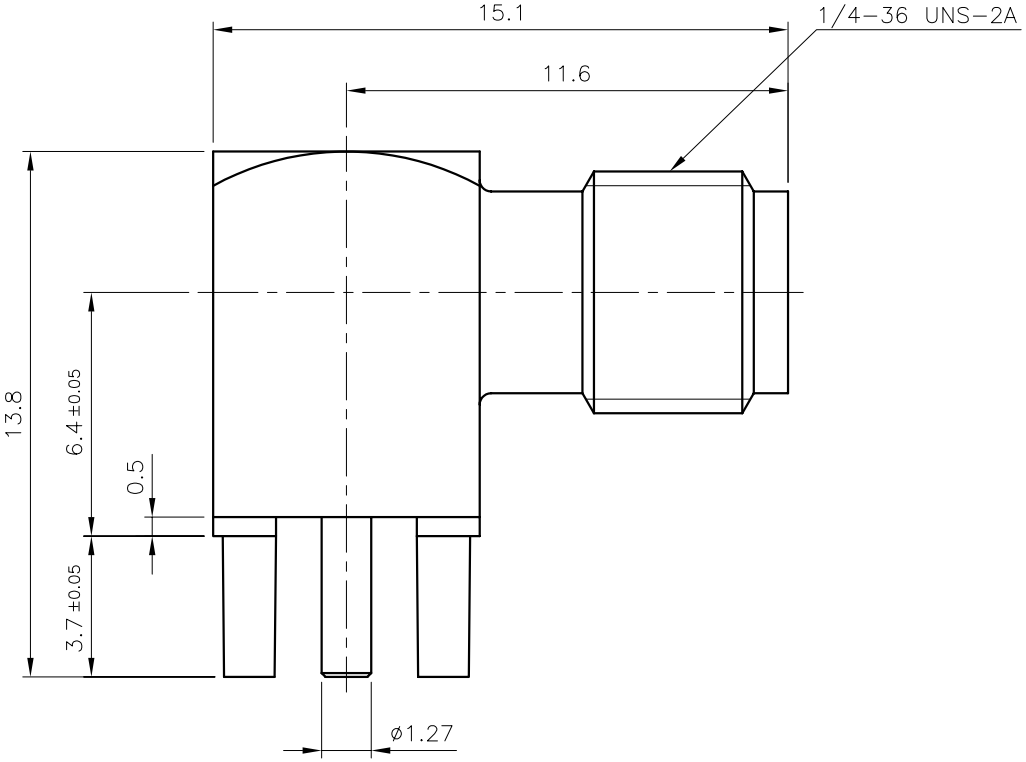

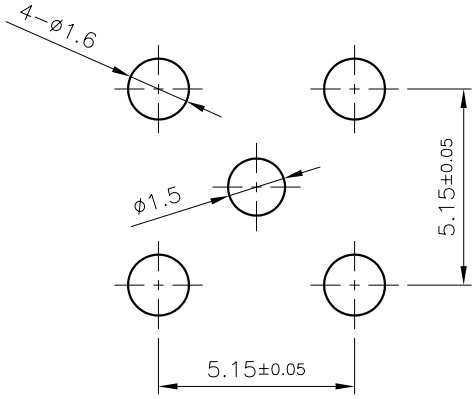

PCB MOUNTING HOLE SIZE

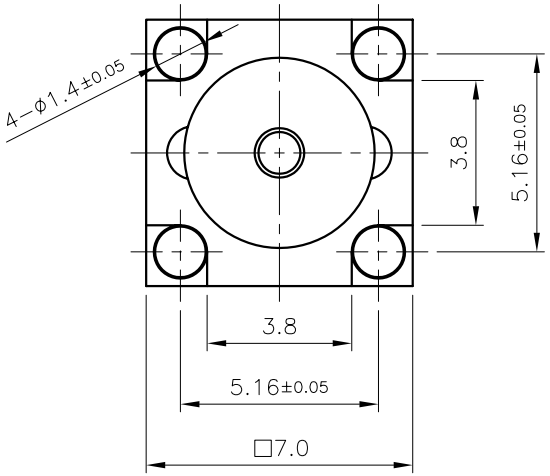

Notes

1. RoHS & Pb-FREE
2. CONNECTOR MATERIAL & FINISHES
   2-1. SMA JL------▶ ▷BODY : ZnDC / Gold Plating
   CONTACT : Beryllium copper / Gold Plating
   INSULATOR : TEFLON / White

NO.	DESCRIPTION	Q'TY	MATERIAL	PLATING	CODE	
TOLERANCE: Decimal ±0.1; Angle ±1°	DATE	2011. 12. 06.	KJ COMTECH CO.,LTD.		RF & MICROWAVE TECHNOLOGY Tel : 82-32-347-8015 Fax : 82-32-347-8017	
	APPROVED BY	J.H.YOUN	TITLE	SMA50 PCB JL-4R		
	CHECKED BY					
MATERIAL	DRAWN BY	I.C.KIM				
FINISH	SCALE 5/1	UNIT mm	A4	DWG NO.	CN02737-N/1	
				REVISION	I R	SHEET 1 of 1