REVISION		
REV	DESCRIPTION	DATE
IR	Initial Registration	2009. 12. 17.
OR	[설변No.201003-0032]업체요청-BODY 도금SPEC 변경	2010. 03. 26.

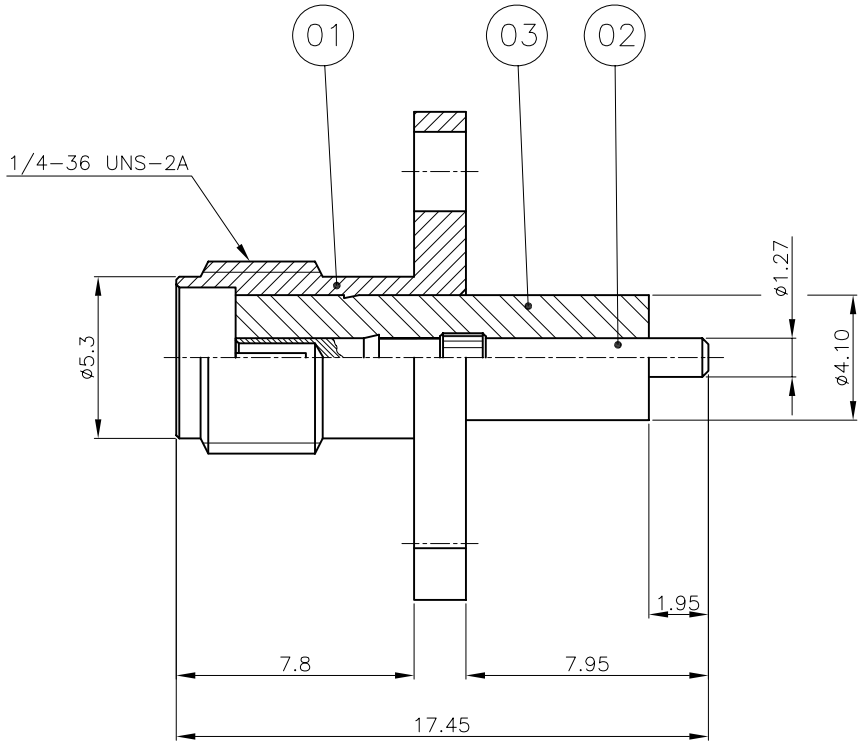

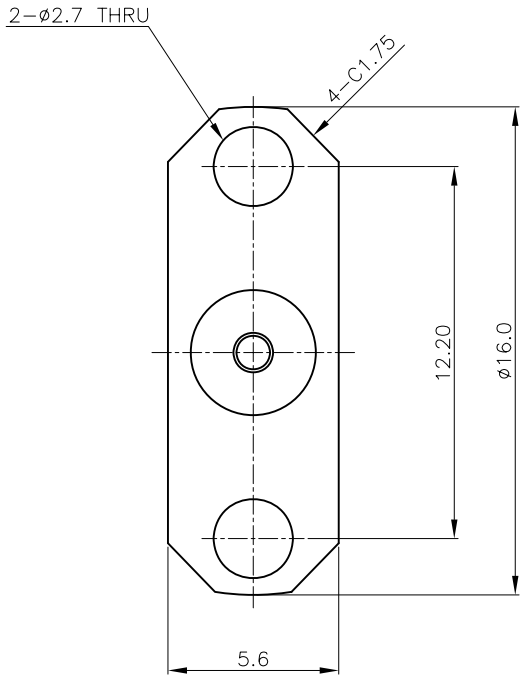

NO.	DESCRIPTION	Q'TY	MATERIAL	PLATING	CODE
3	INSULATOR	1	TEFLON		DIN01364-N/1
2	CONTACT	1	Beryllium copper	Gold Plated	DCT01423-5/1
OR 1	BODY	1	BRASS	Nickel Plated ~~Gold Plated~~	DBD00347-5/2 ~~DBD00347-5/1~~

TOLERANCE	Decimal ±0.1	DATE	2010. 03. 26.
	Angle ±1°	APPROVED BY	Y.H.CHOI
		CHECKED BY	I.C.KIM
MATERIAL	———	DRAWN BY	D.W.KANG
FINISH	———	SCALE 3/1	UNIT mm

KJ COMTECH
KJ COMTECH CO.,LTD.
RF & MICROWAVE TECHNOLOGY
Tel : 82-32-347-8015
Fax : 82-32-347-8017

TITLE
SMA50 SOLDER END JS-2H

A4

DWG NO. CN02508-7/1

REVISION O R

SHEET 1 of 1