REVISION		
REV.	DESCRIPTION	DATE
R	최초 개정	2007. 06. 26.

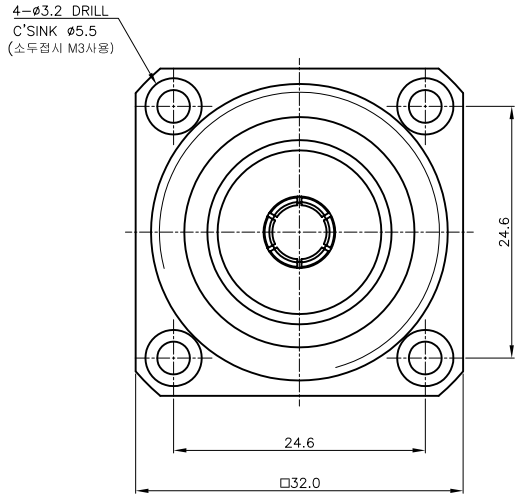

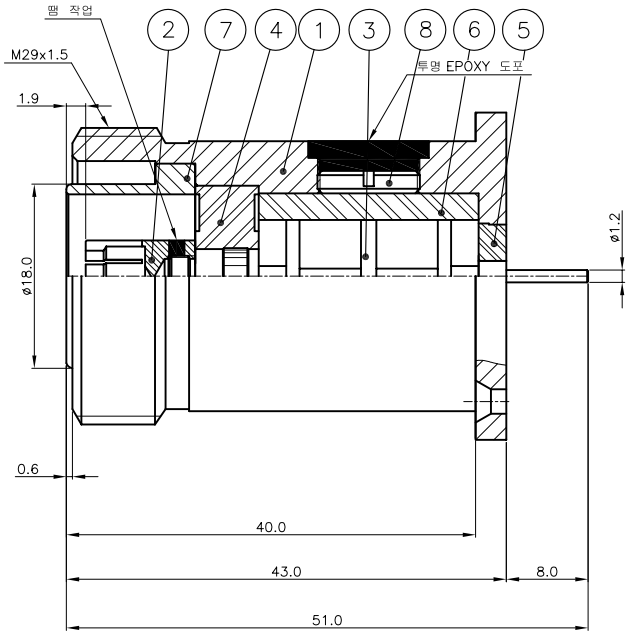

* ELECTRICAL SPECIFICATIONS
Frequency Range : DC ~ 3.0GHz
V.S.W.R (Max.) : 1.15 : 1
Impedance : 50Ω

NO.	DESCRIPTION	Q'TY	MATERIAL	PLATING	CODE
8	COVER	1	MBsBD	Silver Plate	DCS00040-5/1
7	JACK	1	MBsBD	SUCO Plate 6μm	DJA00096-5/1
6	INSUALTOR (C)	1	TEFLON	White	DIN01592-N/1
5	INSUALTOR (B)	1	TEFLON	White	DIN01572-N/1
4	INSUALTOR (A)	1	TEFLON	White	DIN01571-N/1
3	RESONATOR LPF PIN	1	MBsBD	Silver Plate 7μm	DRB00351-5/1
2	DIN CONTACT	1	BeCu	Silver Plate 7μm	DCT02023-5/1
1	BODY	1	MBsBD	SUCO Plate 6μm	DBD02480-5/1

TOLERANCE	Decimal ±0.1	DATE	2009. 06. 26.
	Angle ±1°	APPROVED BY	S.J.YOUN
MATERIAL		CHECKED BY	I.C.KIM
		DRAWN BY	E.H.KIM
FINISH		SCALE 2/1	UNIT mm

KJ COMTECH
KJ COMTECH CO.,LTD.
RF & MICROWAVE TECHNOLOGY
Tel : 82-32-347-8015
Fax : 82-32-347-8017

TITLE
7/16DIN SOLDER END JS-4H LPF용

A3

DWG NO. CN02416-7/1

REVISION R

SHEET 1 of 1