REVISION		
REV	DESCRIPTION	DATE
IR	최초개정	2009.03.18.

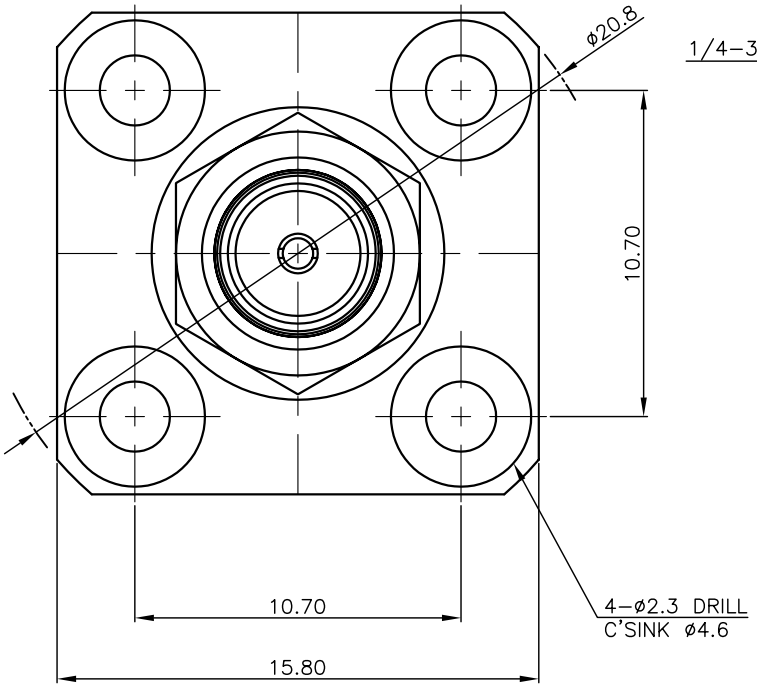

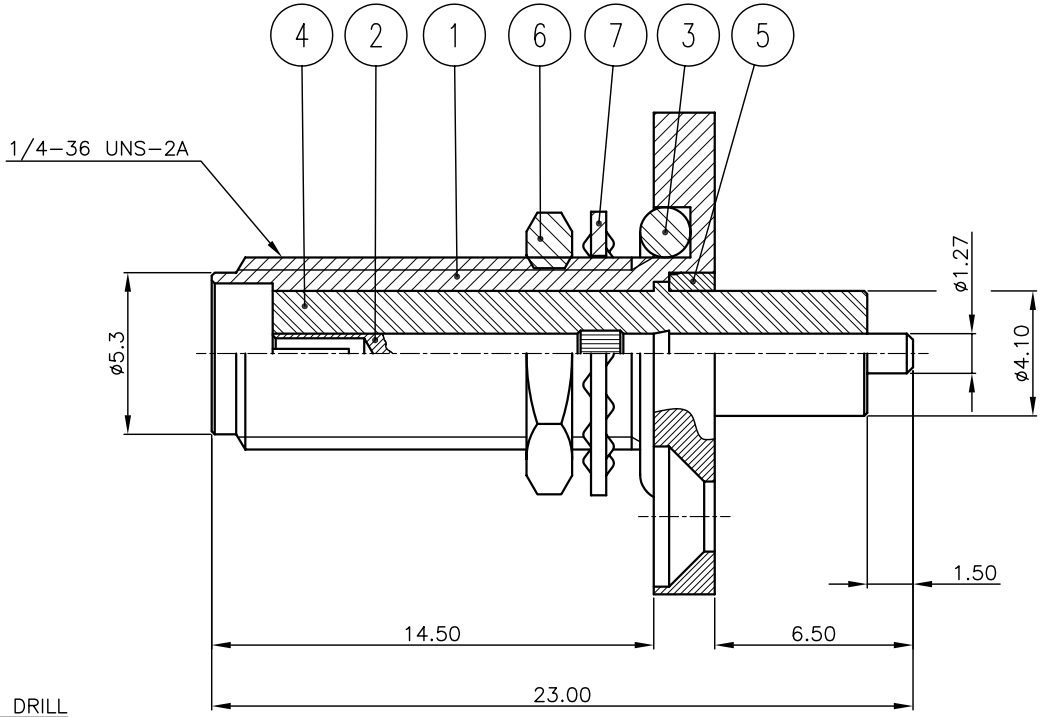

NO.	DESCRIPTION	Q'TY	MATERIAL	PLATING	CODE
7	WASHER	1	BsS	Gold Plated	DWA00005-5/1 (Q2008)
6	NUT	1	MBsBD	Gold Plated	DNT00025-5/1 (N2002)
5	COVER	1	MBsBD	Gold Plated	DCV00036-5/1 (L2042)
4	INSULATOR	1	TEFLON		DIN01533-N/1
3	GASKET	1	NBR		DGK00023-N/1 (G2004)
2	CONTACT	1	BeCu	Gold Plated	DCT01938-5/1
1	BODY	1	MBsBD	Gold Plated	DBD02423-5/1

TOLERANCE	Decimal ±0.1	DATE	2009. 03. 18.
	Angle ±1°	APPROVED BY	S.J.YOUN
MATERIAL	———	CHECKED BY	E.H.KIM
		DRAWN BY	I.C.KIM
FINISH	———	SCALE 4/1	UNIT mm

KJ COMTECH
KJ COMTECH CO.,LTD.
RF & MICROWAVE TECHNOLOGY
Tel : 82-32-347-8015
Fax : 82-32-347-8017

TITLE: SMA50 SOLDER END JB-4H

A4 | DWG NO. CN02355-7/1 | REVISION I R | SHEET 1 of 1