REVISION		
REV	DESCRIPTION	DATE
IR	Initial Registration	2009.06.10.
A	[작업성 개선 구조 변경]	2009.12.01.
B	[부적합] D-CUTTING 치수 변경	2010.01.27.
C	[고객요청] D-CUTTING 치수 재변경	2010.02.24.
D	[설변No.201006-0019] 업체 요청 BOM구성 NUT, WASHER, BODY 변경.	2010.06.23
E	[설변처리No.201302-0008] 조립성 개선 (PIN 널링 위치 변경)	2013.02.25.
F	[설변No.202012-0003] 조립성 개선으로 인한 가이즈 치수 변경	2020.12.07.

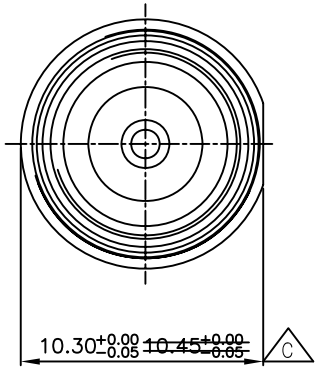

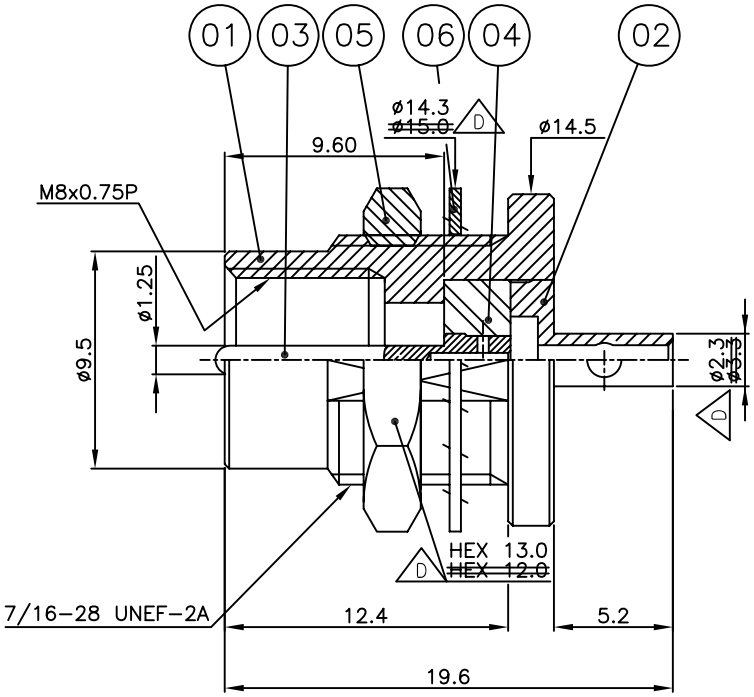

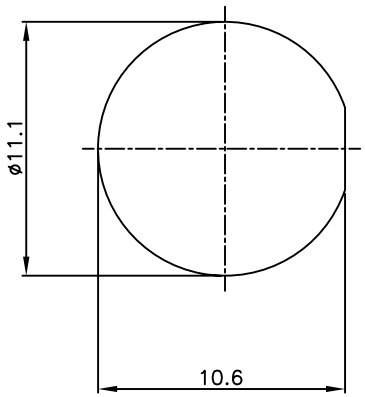

RECOMMENDED
MOUNTING HOLE

	NO.	DESCRIPTION	Q'TY	MATERIAL	PLATING	CODE
D	6	WASHER	1	BRASS	Nickel Plated	DWA00082-N/1 ~~DWA00023-5/1~~
D	5	NUT	1	BRASS	Nickel Plated	DNT00041-5/1 ~~DNT00068-5/1~~
	4	INSULATOR	1	PTFE		DIN01577-N/1
E	3	CONTACT	1	BRASS	Gold Plated	DCT02005-5/1
F D A	2	BODY (B)	1	BRASS	Nickel Plated	DBD02655-5/2 ~~DBD02655-5/1~~
C B	1	BODY (A)	1	BRASS	Nickel Plated	DBD02495-5/2 ~~DBD02495-5/1~~

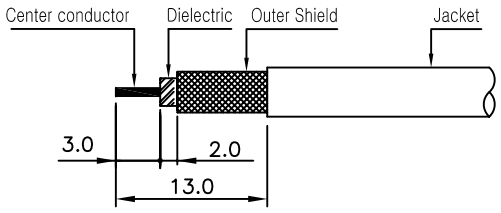

*CABLE STRIPPING

TOLERANCE	Decimal ±0.1	DATE	2020. 12. 07.
	Angle ±1°	APPROVED BY	I.C.KIM
		CHECKED BY	
MATERIAL	———	DRAWN BY	S.Y.EUN
FINISH	———	SCALE 3/1	UNIT mm

KJ COMTECH
KJ COMTECH CO.,LTD.
RF & MICROWAVE TECHNOLOGY
Tel : 82-32-347-8015
Fax : 82-32-347-8017

TITLE
FME CABLE PB (F/N) MHC-231

A4 | DWG NO. CN02342-7/4 | REVISION F | SHEET 1 of 1