REVISION		
REV	DESCRIPTION	DATE
IR	Initial Resistration	2009.02.04.
A	특성 개선으로 인한 PIN 외경 변경	2009.02.09.
B	PIN 너어링 추가 및 길이 변경	2009.03.11.
C	커넥터 Ground 돌출부 길이 변경 0.1->0.05	2009.08.14.

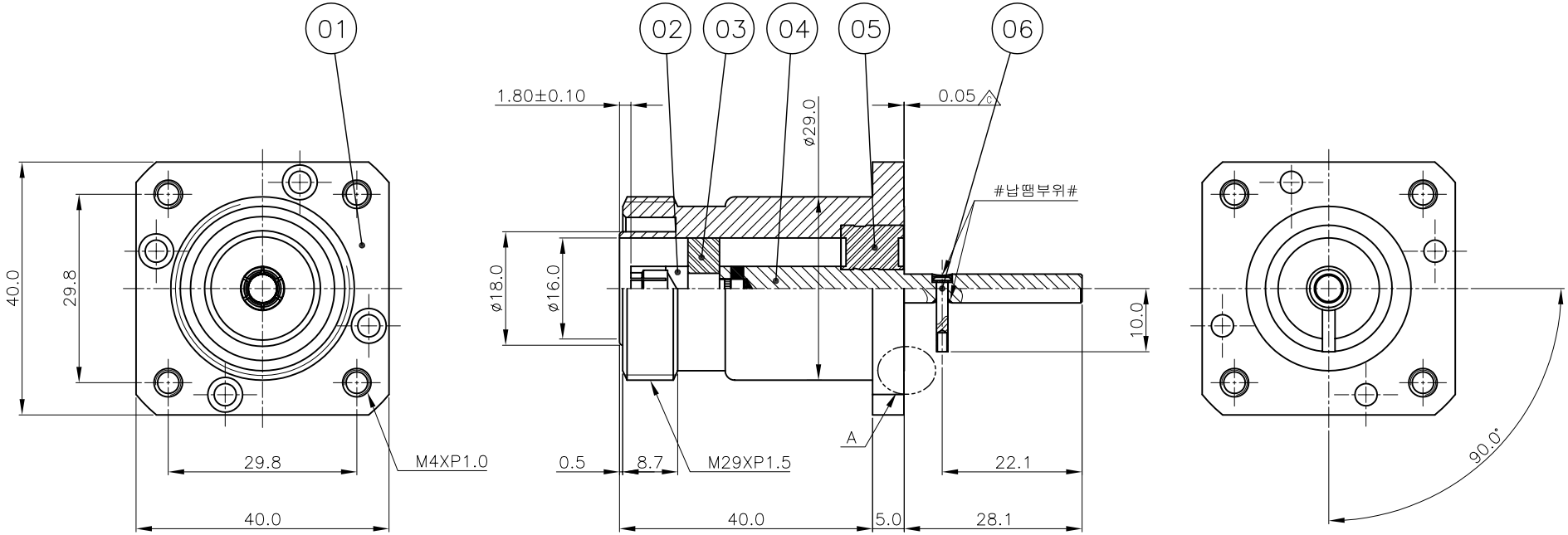

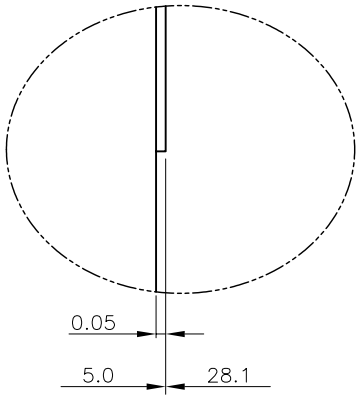

A부 확대도

	NO.	DESCRIPTION	Q'TY	MATERIAL	PLATING	CODE
A B	6	CONTACT	1	MBsBD	Silver Plate (6㎛)	DCT01890-5/2
	5	INSULATOR	1	TEFLON		DIN01496-N/1
	4	CONTACT	1	MBsBD	Silver Plate (6㎛)	DCT01891-5/1
	3	INSULATOR	1	TEFLON		DIN00951-N/1
B	2	CONTACT	1	BeCu	Silver Plate (6㎛)	DCT01892-5/2
C	1	BODY	1	MBsBD	SUCO Plate (6㎛)	DBD02234-5/3

TOLERANCE	Decimal ±0.3	DATE	2009. 08. 14.
	Angle ±1°	APPROVED BY	J.H.YOUN
		CHECKED BY	M.H.LEE
MATERIAL		DRAWN BY	K.I.CHO
FINISH		SCALE 1/1	UNIT mm

KJ COMTECH
KJ COMTECH CO.,LTD.
RF & MICROWAVE TECHNOLOGY
Tel : 82-32-347-8015
Fax : 82-32-347-8017

TITLE DIN7/16-J-H4

A4 DWG NO. CN02328-7/4

REVISION REV.C SHEET 1 of 1