REVISION

REV	DESCRIPTION	DRAWN	APPR	DATE
IR	Initial Registration	E.H.KIM	S.J.YOUN	2009.01.07
1	조립성 향상[설변No.연구200905-0012] (TEFLON 외경 Ø4->Ø4.1로 변경)	E.H.KIM	S.J.YOUN	2009.05.12
2	[설변No.연구200905-0001]생산성 향상 (PIN, TEFLON 변경으로 인한 설변)	D.W.KANG	Y.H.CHOI	2010.05.03
3	[설변처리No.201201-0011] BODY 내부 낚시바늘 추가	I.C.KIM	J.H.YOUN	2012.02.01

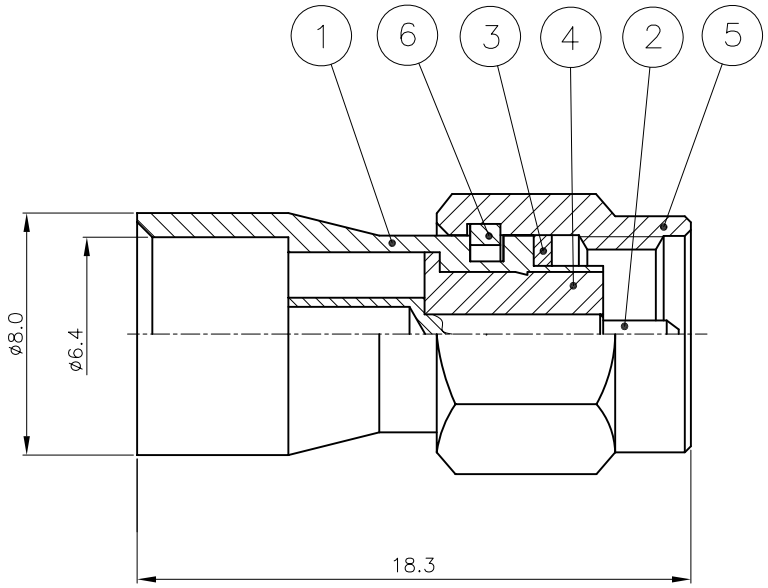

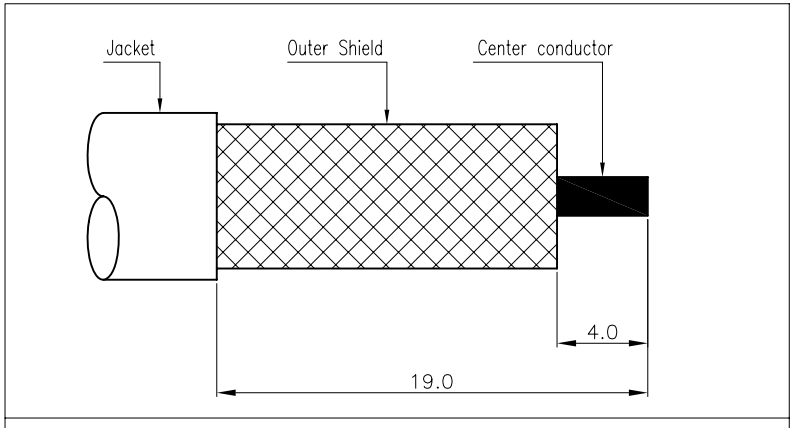

CABLE STRIPPING (SCALE 3 : 1)

	NO.	DESCRIPTION	Q'TY	MATERIAL	PLATING	CODE
	6	SPRING RING	1	SUS	부동태 처리	DSR00002-5/1 (R2001)
	5	COUPLING CAP	1	MBsBD	Gold Plate	DCU00005-5/1
2 1	4	INSULATOR	1	TEFLON	White	DIN00173-N/2 ~~DIN00173-N/1 (H2306)~~ ~~DIN00101-N/1 (H2069)~~
	3	GASKET	1	SILICONE RUB	RED	DGK00004-N/1 (G2001)
2	2	CONTACT	1	MBsBD	Gold Plate	DCT00285-5/2 ~~DCT00285-5/1 (E2156)~~
3	1	BODY	1	MBsBD	Gold Plate	DBD02326-5/1

TOLERANCE	Decimal ±0.1	DATE	2012. 02. 01.
	Angle ±1°	APPROVED BY	J.H.YOUN
		CHECKED BY	
MATERIAL	-	DRAWN BY	I.C.KIM
FINISH	-	SCALE 4/1	UNIT mm

KJ COMTECH
KJ COMTECH CO.,LTD.
RF & MICROWAVE TECHNOLOGY
Tel : 82-32-347-8015
Fax : 82-32-347-8017

TITLE: SMA50-PS-250

A4 | DWG NO. CN02303-7/2 | REVISION 3 | SHEET 1 of 1