WORK / ST									
ST(Old)									
ST(Rev)									

REVISION

REV	DESCRIPTION	DATE

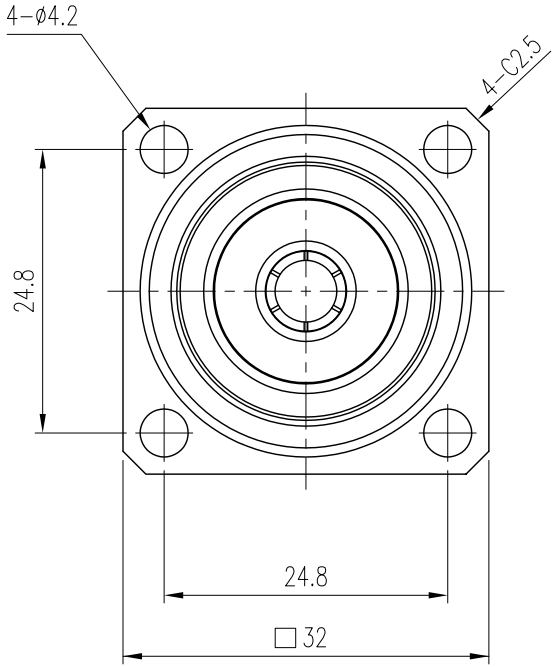

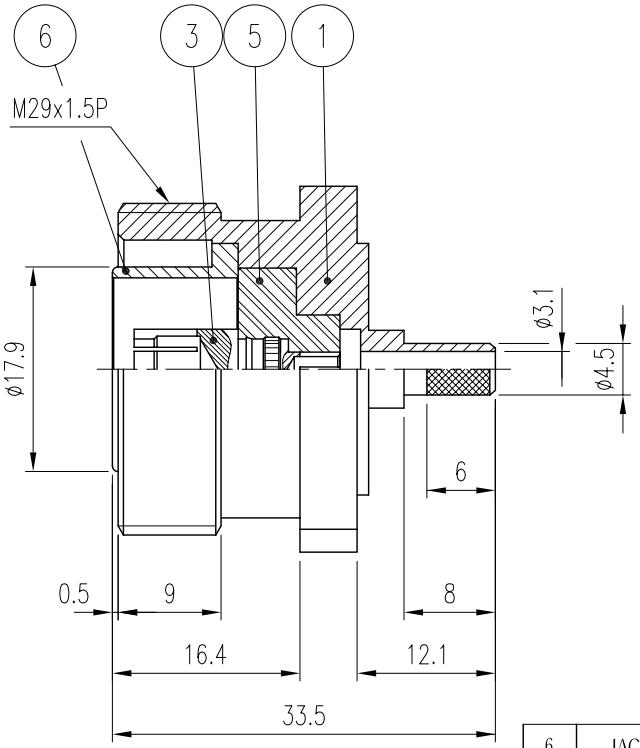

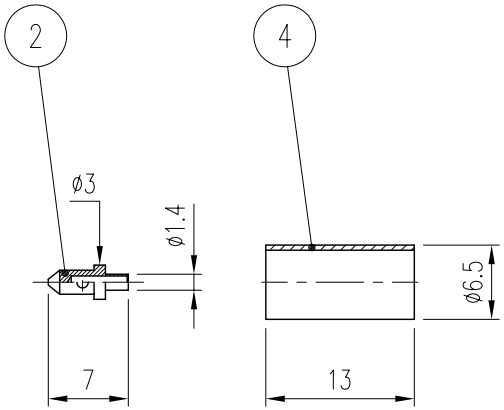

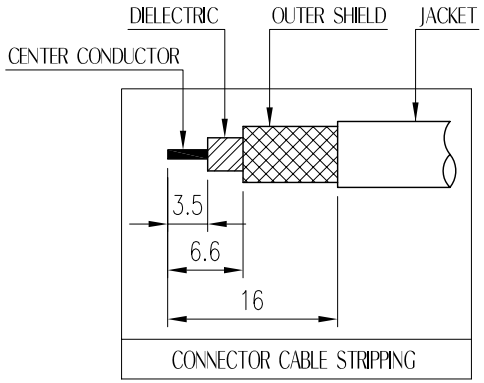

NO.	DESCRIPTION	Q'TY	MATERIAL	PLATING	REMARKS
6	JACK	1	BRASS	SUCO Plated	DJA00055-5/2
5	INSULATOR	1	PTFE		DIN01176-N/1
4	FERRULE	1	BRASS	Silver Plated	DFE00057-5/1 (F2004)
3	CONTACT (B)	1	Beryllium copper	Silver Plated	DCT01640-5/1
2	CONTACT (A)	1	BRASS	Gold Plated	DCT01122-5/1 (E5085)
1	BODY	1	BRASS	SUCO Plated	DBD01785-5/2

CUSTOMER	DATE 2008. 8. 12.		
	APPROVED BY		
CUSTOMER CODE	CHECKED BY		
	DRAWN BY		
TOLERANCES .* ±0.1 .** ±0.05	SCALE 3/1	UNIT mm	WEIGHT —

KJ COMTECH
KJ COMTECH CO.,LTD.
RF & MICROWAVE TECHNOLOGY
Tel : 82-32-347-8015
Fax : 82-32-347-8017

TITLE 7/16"DIN-JC-H4-RG400 VER.0

A4

DWG NO. CN02101-7/2

OLD CODE.