REVISION				
REV	DESCRIPTION	DRAWN	APPR	DATE
IR	Initial Registration	E.H.KIM	I.C.KIM	2012.02.26.
1	구성 핀 변경 (특성 개선)	I.C.KIM	I.C.KIM	2013.02.20.
2	[설변처리No.201303-0020] BODY B 억지끼움부 공차 및 길이 수정	I.C.KIM	I.C.KIM	2013.03.19.
3	[설변처리No.201307-0005] 원가절감 (C-RING변경- PIN 안착부 길이 변경)	E.H.KIM	I.C.KIM	2013.07.12.

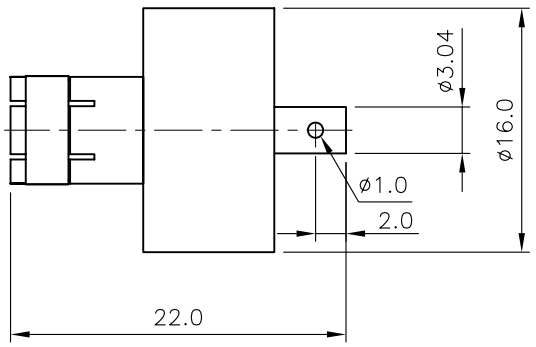

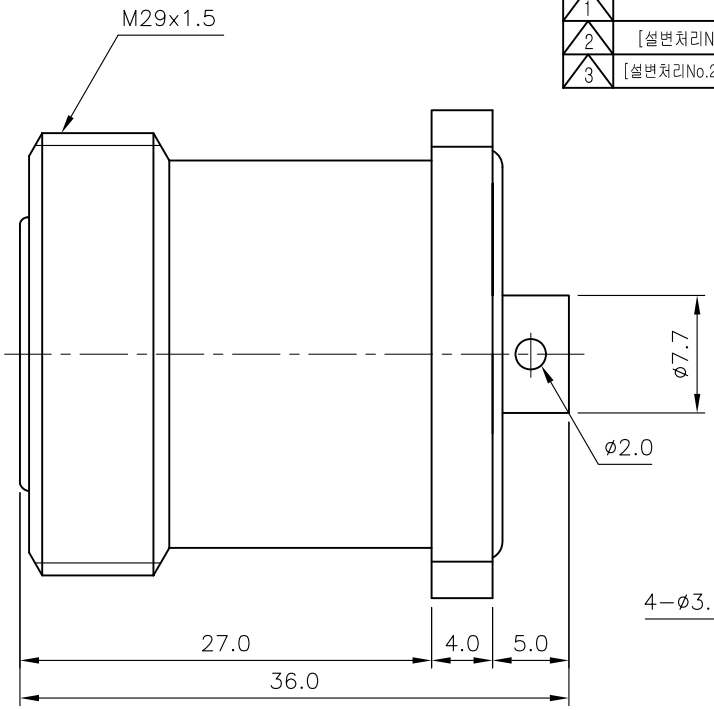

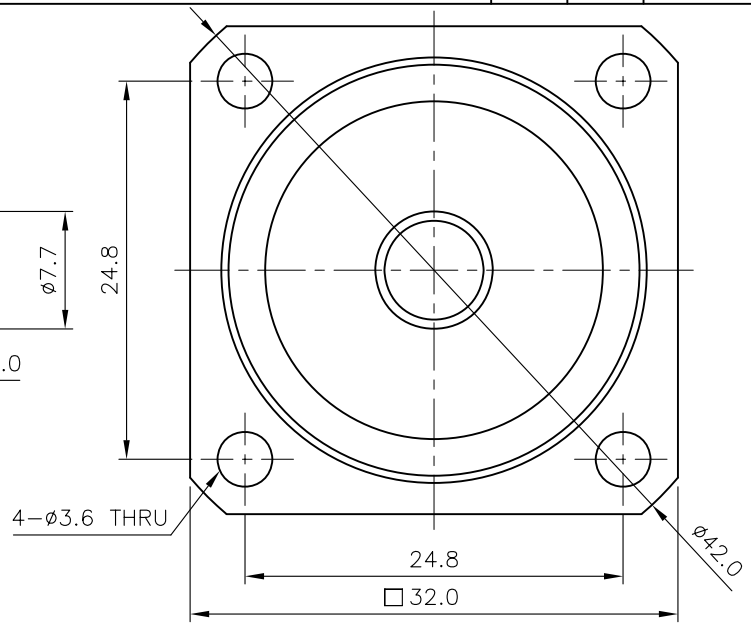

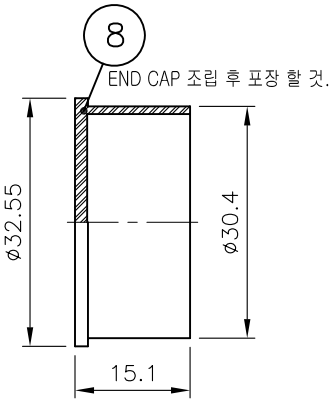

NO.	DESCRIPTION	Q'TY	MATERIAL	PLATING	CODE
8	END CAP	1	PLASTIC	White	DGK00113-N/1
1 7	RING	1	BeCu	Silver Plate (7㎛)	DSR01054-5/2 ~~DSR01056-5/1~~
6	INSULATOR	1	TEFLON		DIN02049-N/1
5	GASKET	1	SILICONE RUB		DGK00194-N/1
4	GASKET	1	SILICONE RUB		DGK00199-N/1
1 3	CONTACT	1	MBsBD	Silver Plate (3㎛)	DCT02734-5/1 ~~DCT02733-5/1~~
2 2	BODY	1	MBsBD	Silver Plate (3㎛)	DBD03231-5/1
1	BODY	1	MBsBD	Silver Plate (3㎛)	DBD03233-5/1

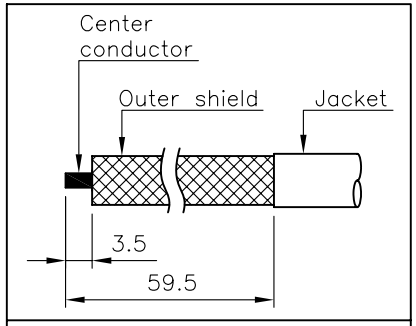

CABLE STRIPPING

* ELECTRICAL SPECIFICATIONS
Impedance : 50Ω
Frequency Range : DC~3GHz
V.S.W.R : ≤1.15 max
PIM : ≤-123 dBm (2x43dBm)
Insulation resistance : ≥1000 MΩ
Dielectric withstanding voltage : 1200 V
Power : 200 W

TOLERANCE	Decimal ±0.1	DATE	2013. 07. 12.
	Angle ±1°	APPROVED BY	I.C.KIM
		CHECKED BY	
MATERIAL		DRAWN BY	E.H.KIM
FINISH		SCALE 2/1	UNIT mm

KJ COMTECH
KJ COMTECH CO.,LTD.
RF & MICROWAVE TECHNOLOGY
Tel : 82-32-347-8015
Fax : 82-32-347-8017

TITLE
7/16 DIN50 CABLE JS-4H 250

A4 | DWG NO. CN02063-7/3 | REVISION 3 | SHEET 1 of 1