WORK / ST										
ST(Old)										
ST(Rev)										

REVISION

REV	DESCRIPTION	DATE

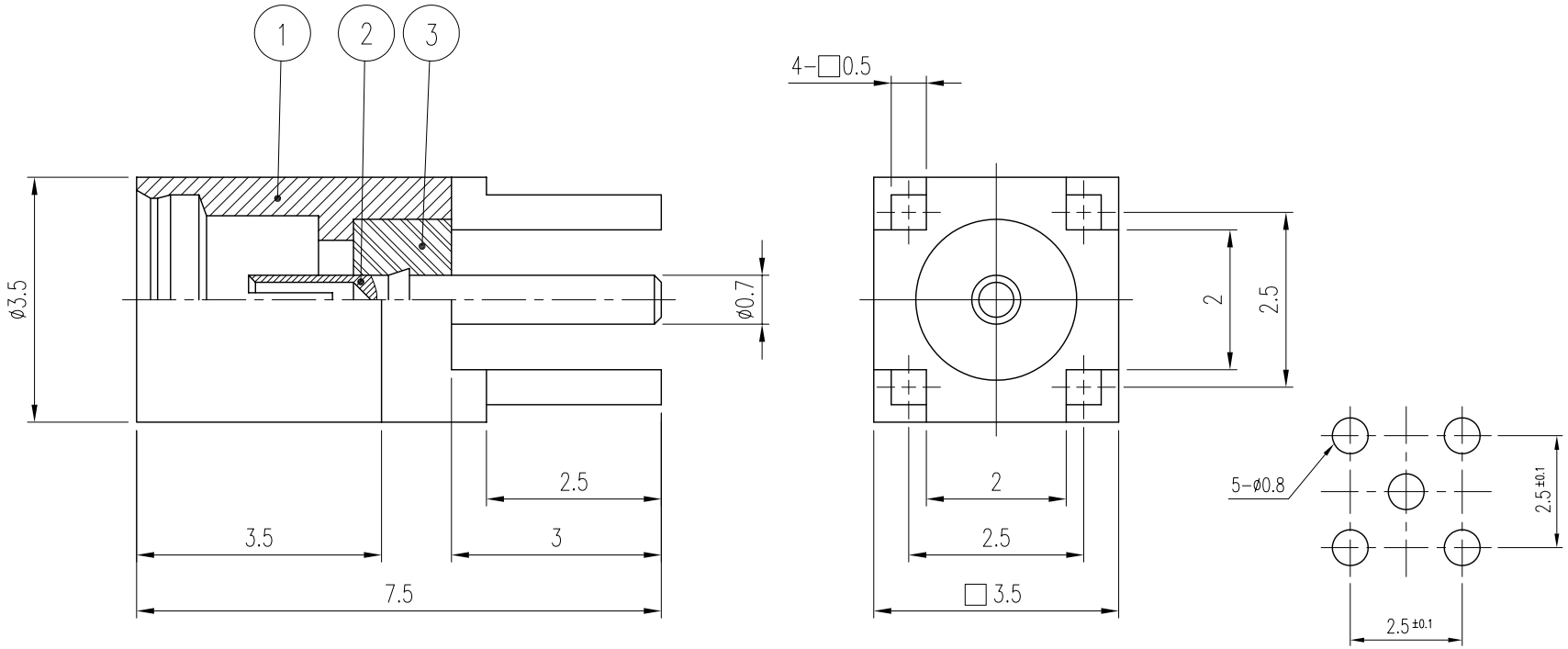

DIMENSION OF MOUNTING HOLE

Note.

1.Material and plated
Body:Brass, gold plated
Center contact:Berylliym copper, gold plated
Insulators:PTFE

2.ELECTRIACAL CHARACTERISTICS
Characteristic inpedance : 50 ohm
Working voltage : 170V
Frequency range : 0-6GHz
Dielectric withstanding voltage : 500V
Contact resistance
Center contact : 10m ohm max.
Outer contact : 5m ohm max.
Insulation resistance : 1000M ohm min.
VSWR : 1.25max.

NO.	DESCRIPTION	Q'TY	MATERIAL	PLATING	REMARKS
3	INSULATOR	1	PTFE		DIN01355-N/1
2	CONTACT	1	Beryllium copper	Gold Plated	DCT01635-5/1 (E1526)
1	BODY	1	BRASS	Gold Plated	DBD02113-5/1 (D1536)

CUSTOMER	DATE	KJ COMTECH CO.,LTD.	RF & MICROWAVE TECHNOLOGY Tel : 82-32-347-8015 Fax : 82-32-347-8017
	APPROVED BY		
CUSTOMER CODE	CHECKED BY	TITLE	MMCX50-J-4R-R VER.0
	DRAWN BY		
TOLERANCES .* ±0.1 .** ±0.05	SCALE 3/1 / UNIT mm / WEIGHT —	A4	DWG NO. CN01727-7/1
			OLD CODE. K311-456-001