WORK / ST										
ST(Old)										
ST(Rev)										

REVISION

REV	DESCRIPTION	DATE

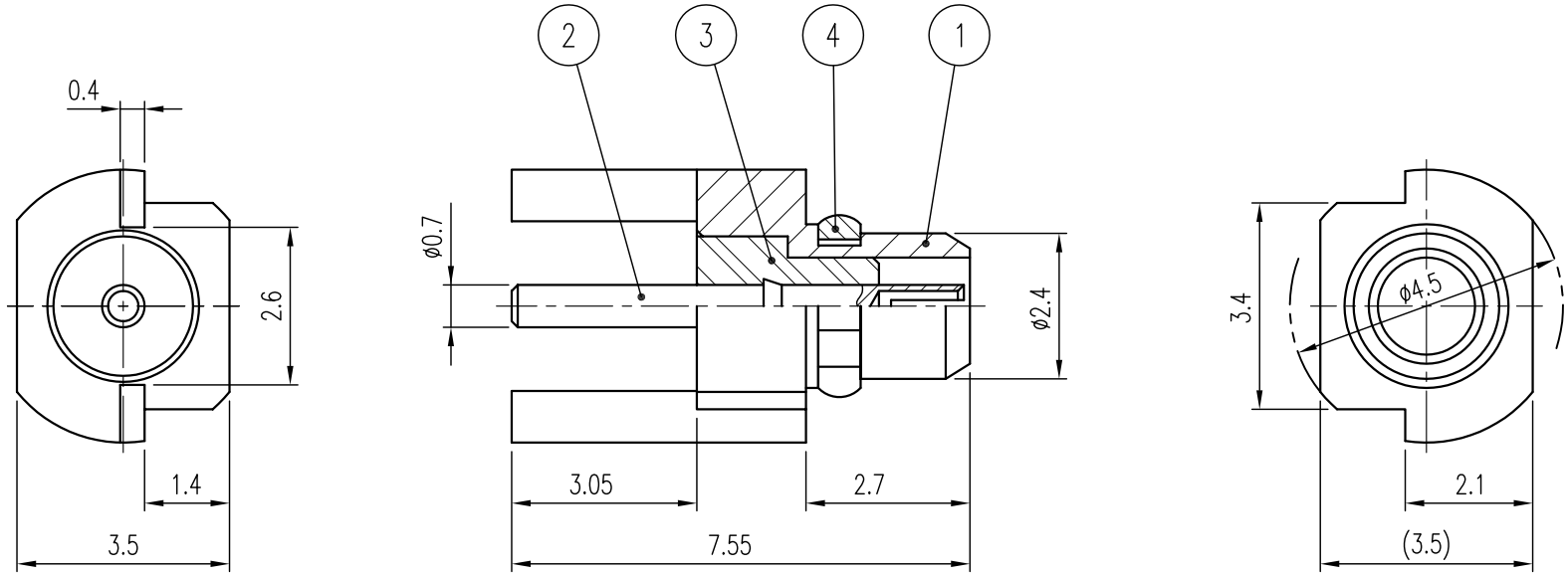

NO.	DESCRIPTION	Q'TY	MATERIAL	PLATING	REMARKS
4	SPRING RING	1	BeCu	Gold Plate	DSR00001-5/1
3	INSULATOR	1	TEFLON		DIN01857-N/1
2	CONTACT	1	BeCu	Gold Plate	DCT01274-5/1
1	BODY	1	MBsBD	Gold Plate	DBD01619-5/1

CUSTOMER	DATE 2002. 3. 27.	KJ COMTECH CO.,LTD.	RF & MICROWAVE TECHNOLOGY Tel : 82-32-347-8015 Fax : 82-32-347-8017
	APPROVED BY		
CUSTOMER CODE	CHECKED BY	TITLE	MMCX50 PCB JS-2R (edge reverse)
	DRAWN BY		
TOLERANCES .* ±0.1 .** ±0.05	SCALE 5/1 / UNIT mm / WEIGHT —	A4	DWG NO. CN01630-7/1
			OLD DWG CODE. K311-479-001