WORK / ST										
ST(Old)										
ST(Rev)										

REVISION

REV	DESCRIPTION	DATE

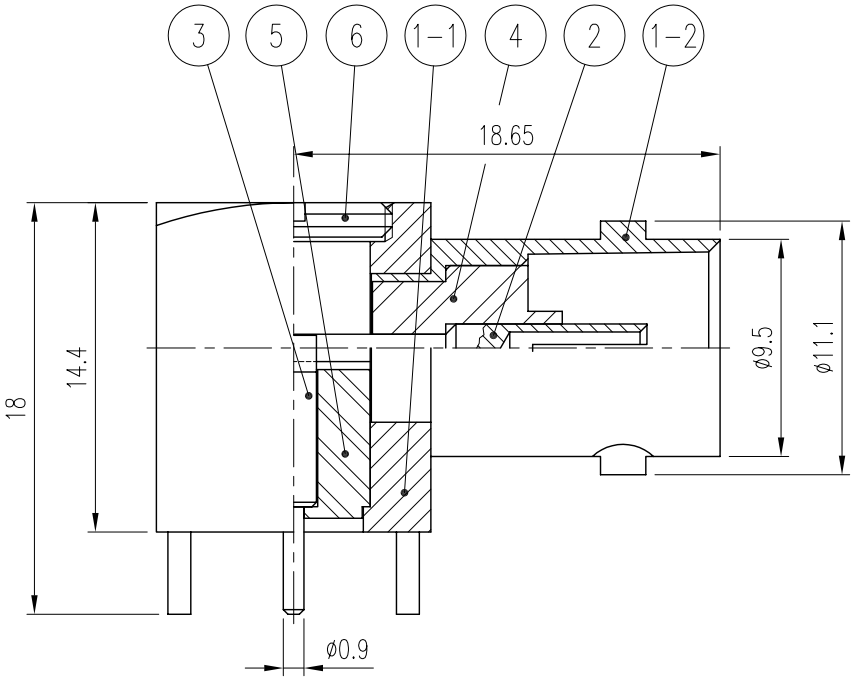

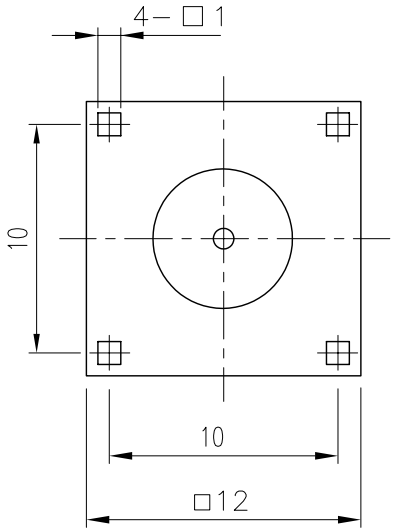

NO.		DESCRIPTION	Q'TY	MATERIAL	PLATING	REMARKS	
6		COVER	1	MBsBD	Nickel Plated	DCS00005-5/1 (L6004)	
5		INSULATOR	1	TEFLON		DIN00400-N/1 (H6485)	
4		INSULATOR	1	TEFLON		DIN00592-N/1 (H6450)	
3		CONTACT	1	MBsBD	Gold Plated	DCT00474-5/1 (E6456)	
2		CONTACT	1	Beryllium copper	Gold Plated	DCT00509-5/1 (E6036)	
1	1-2	BODY (B)	1	MBsBD	Nickel Plated	DBB00213-5/1	DBD02388-3/1
	1-1	BODY (A)	1	MBsBD	Nickel Plated		DBD02387-3/1

CUSTOMER	DATE 2000. 1. 25.		
	APPROVED BY		
CUSTOMER CODE	CHECKED BY		
	DRAWN BY		
TOLERANCES .* ±0.1 .** ±0.05	SCALE 3/1	UNIT mm	WEIGHT —

KJ COMTECH
KJ COMTECH CO.,LTD.
RF & MICROWAVE TECHNOLOGY
Tel : 82-32-347-8015
Fax : 82-32-347-8017

TITLE: BNC75-LJ-4R-R VER.0

A4

DWG NO. CN01546-7/1

DETAIL CODE. K327-672-001