WORK / ST										
ST(Old)										
ST(Rev)										

REVISION

REV	DESCRIPTION	DATE
1	기타 (설변No.연구2007-038) (치수오기로 인한 BODY 치수변경)	2007. 2. 16.

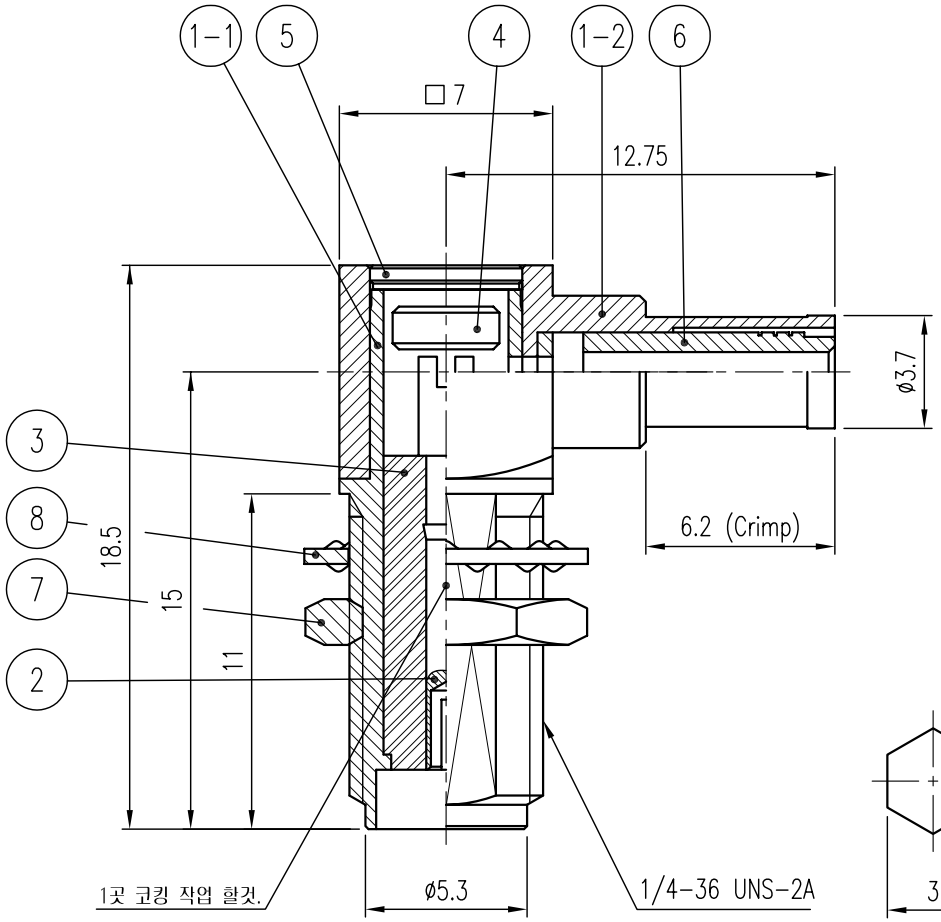

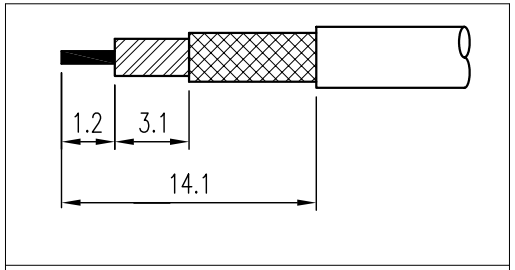

CABLE 탈피도

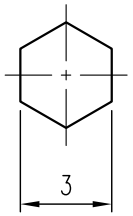

Crimping Tool Size

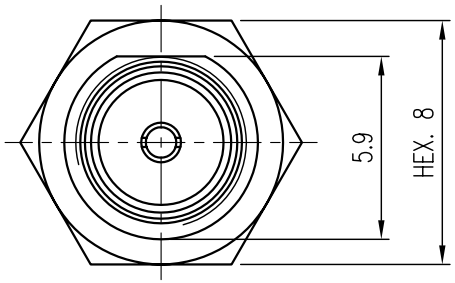

NO.		DESCRIPTION	Q'TY	MATERIAL	PLATING	REMARKS	
8		WASHER	1	BRASS	Gold Plated	DWA00005-5/1 (Q2008)	
7		NUT	1	BRASS	Gold Plated	DNT00024-5/1 (N2001)	
6		INSERT	1	BRASS	Gold Plated	DIS00112-5/1	
5		COVER	1	BRASS	Gold Plated	DCO00032-5/1 (L2018)	
4		INUSLATOR	1	PTFE		DIN00922-N/1 (H3143)	
3		INUSLATOR	1	PTFE		DIN00981-N/1 (H2324)	
2		CONTACT	1	BRASS	Gold Plated	DCT01441-5/1 (E2548)	
1	1-2	BODY(B)	1	BRASS	Gold Plated	DBB00015-5/1	DBD01715-4/1
	1-1	BODY(A)	1	BRASS	Gold Plated		DBD01716-3/1

△1

CUSTOMER	DATE 2007. 2. 5.	KJ COMTECH CO.,LTD.	RF & MICROWAVE TECHNOLOGY Tel : 82-32-347-8015 Fax : 82-32-347-8017
	APPROVED BY		
CUSTOMER CODE	CHECKED BY	TITLE SMA-LBJ-150G VER.1	
	DRAWN BY		
TOLERANCES .* ±0.1 .** ±0.05	SCALE 5/1 / UNIT mm / WEIGHT —	A4	DWG NO. CN01529-7/1 OLD DWG NO. K314-639-000