ST \ 기공										
ST(기존)										
ST(개선)										

REVISION

REV	DESCRIPTION	DATE

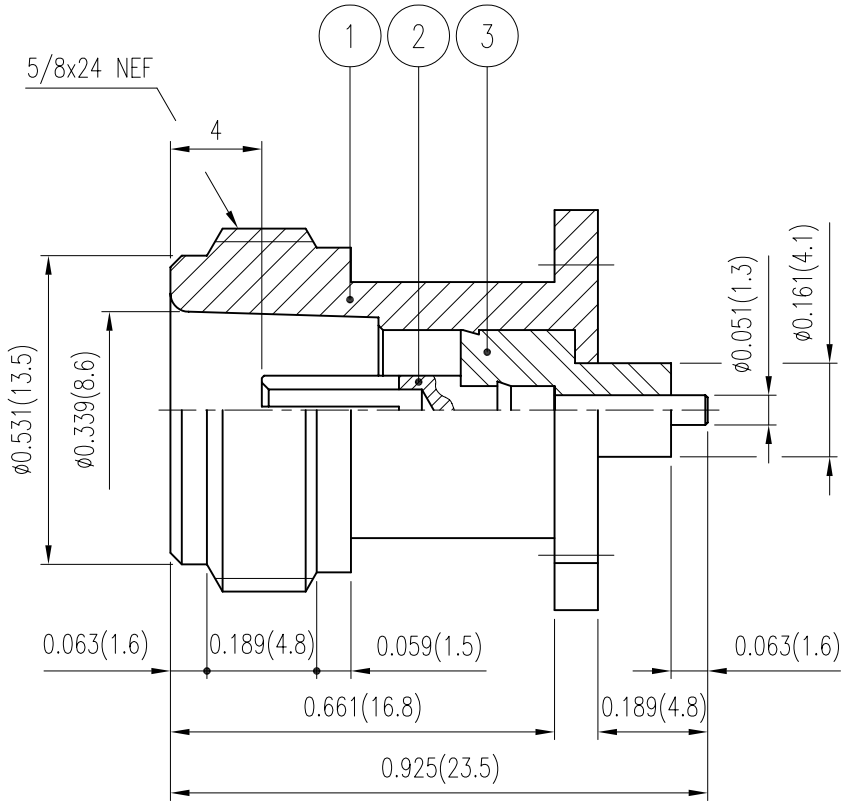

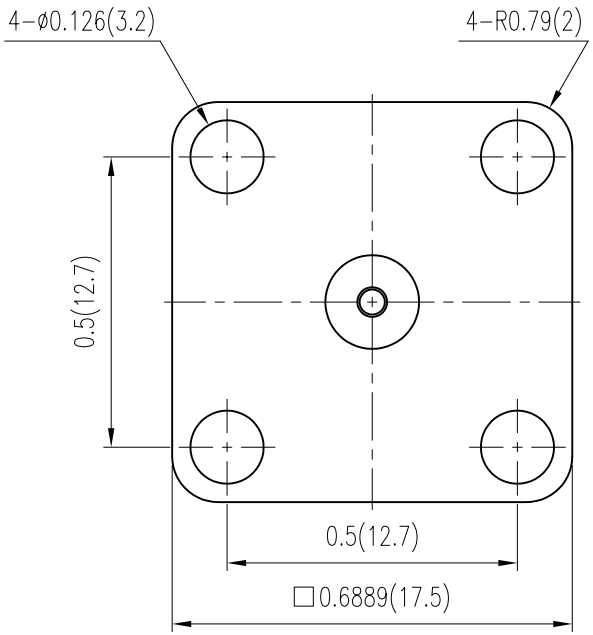

NO.	DESCRIPTION	Q'TY	MATERIAL	PLATING	REMARKS
3	INSULATOR	1	TEFLON		DIN00705-N/1 (H8146)
2	CONTACT	1	BeCu	Gold Plate	DCT02237-5/1 (E8256)
1	BODY	1	MBsBD	Nickel Plate	DBD00988-5/1 (D8194)

TOLERANCE

MATERIAL

HEATING

PLATING

DATE 2003. 11. 10.

APPROVED BY

CHECKED BY

DRAWN BY

SCALE 4/1 | UNIT inch(mm) | WEIGHT —

A4

KJ COMTECH

KJ COMTECH CO.,LTD.

RF & MICROWAVE TECHNOLOGY
Tel : 82-32-347-8015
Fax : 82-32-347-8017

TITLE NJ-H4 4.1-3.2-1.3-1.6

DWG NO. CN01492-7/1

K345-425-005