| WORK / ST | | | | | | | | | | |
|---|---|---|---|---|---|---|---|---|---|---|
| | | | | | | | | | | |
| ST(Old) | | | | | | | | | | |
| ST(Rev) | | | | | | | | | | |

## REVISION

| REV | DESCRIPTION | DATE |
|---|---|---|
| | | |
| | | |

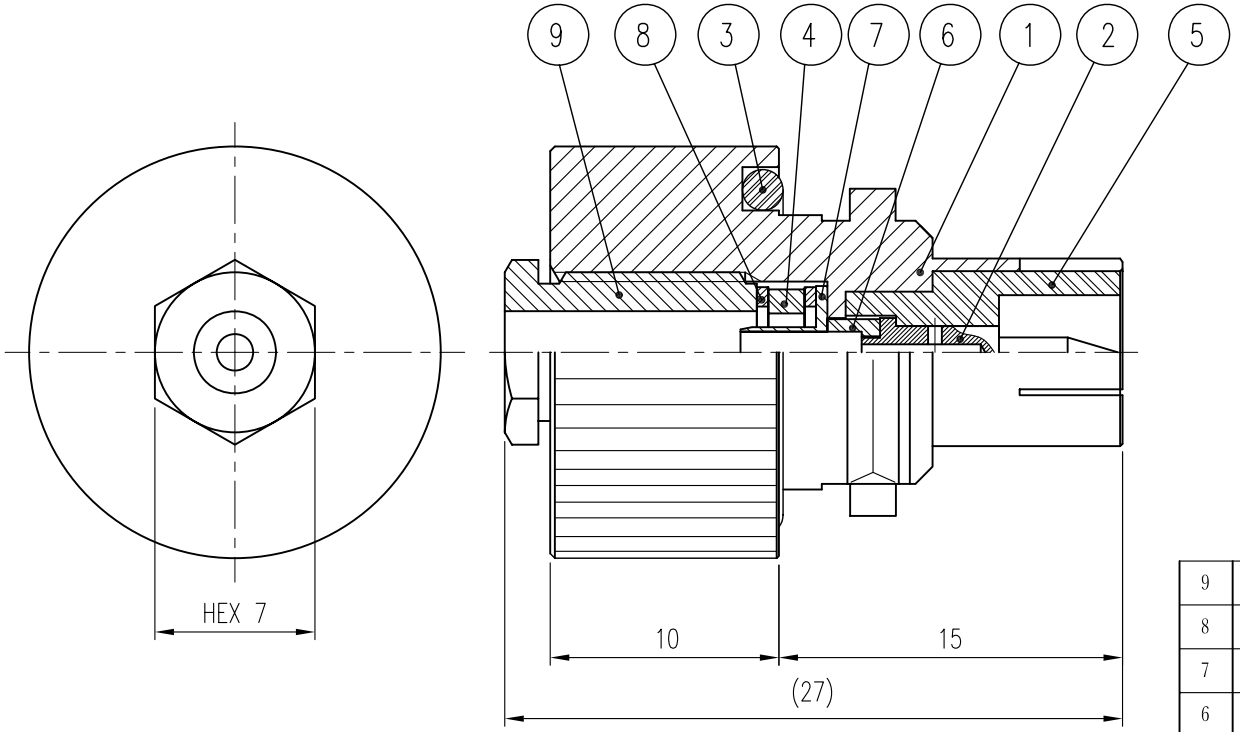


| NO. | DESCRIPTION | Q'TY | MATERIAL | PLATING | REMARKS |
|---|---|---|---|---|---|
| 9 | BACK NUT | 1 | MBsBD | Nickel Plate | DBN00128-5/1 |
| 8 | INSERT | 2 | MBsBD | Nickel Plate | DIS00117-5/1 |
| 7 | INSERT | 1 | MBsBD | Nickel Plate | DIS00118-5/1 |
| 6 | INSULATOR | 1 | TEFLON | | DIN01217-N/1 |
| 5 | INSULATOR | 1 | TEFLON | | DIN01218-N/1 |
| 4 | GASKET | 1 | SILICONE RUB | (White) | DGK00161-N/1 |
| 3 | GASKET | 1 | SILICONE RUB | | DGK00184-N/1 |
| 2 | CONTACT | 1 | MBsBD | Silver Plate | DCT01430-5/1 |
| 1 | BODY | 1 | MBsBD | Nickel Plate | DBD01850-5/1 |

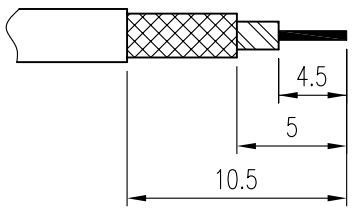


FUJIKURA CABLE STRIPPING

| | | | |
|---|---|---|---|
| CUSTOMER | DATE | 2008. 3. 7. | KJ COMTECH CO.,LTD. RF & MICROWAVE TECHNOLOGY Tel : 82-32-347-8015 Fax : 82-32-347-8017 |
| | APPROVED BY | | |
| CUSTOMER CODE | CHECKED BY | | TITLE BNC50-P-P3 VER.0 |
| | DRAWN BY | | |
| TOLERANCES .* ±0.1 .** ±0.05 | SCALE 3/1 | UNIT mm | WEIGHT — |
| | A4 | DWG NO. CN01325-7/1 | |
| | | OLD CODE. | |