WORK / ST										
ST(Old)										
ST(Rev)										

REVISION

REV	DESCRIPTION	DATE

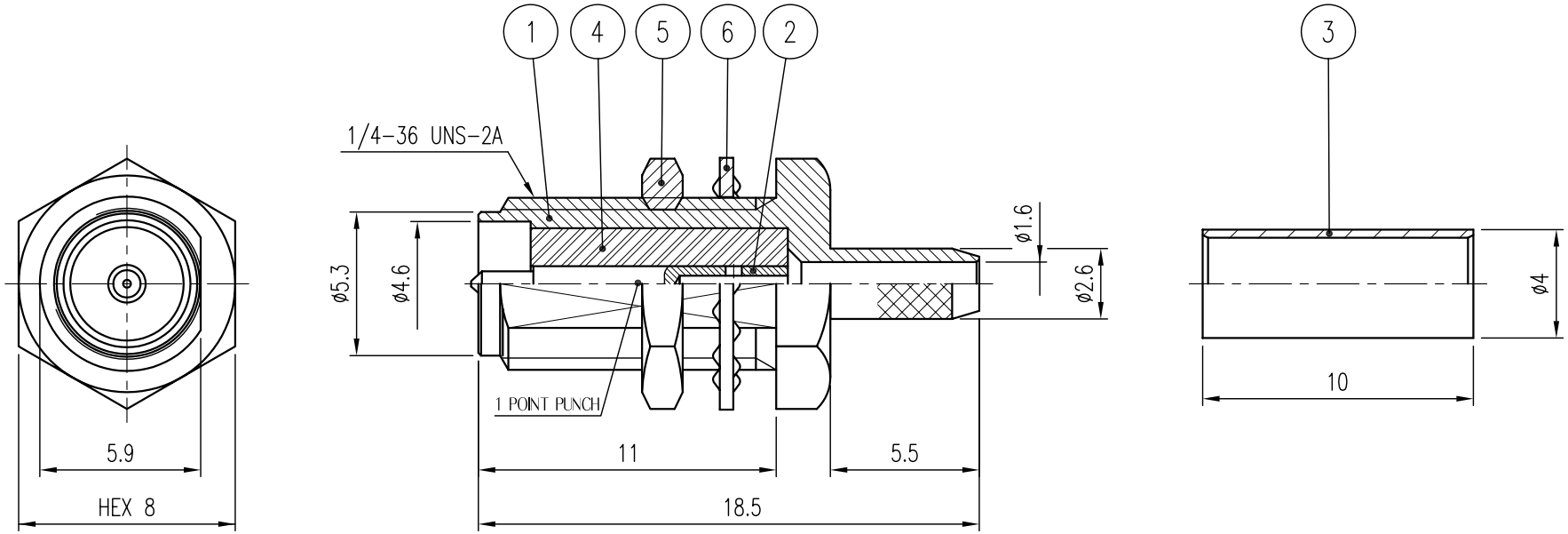

NO.	DESCRIPTION	Q'TY	MATERIAL	PLATING	REMARKS
6	WASHER	1	BsS	Nickel Plated	DWA00005-5/3
5	NUT	1	BRASS	Nickel Plated	DNT00046-5/2
4	INSULATOR	1	PTFE		DIN00172-N/1 (H2307)
3	FERRULE	1	BRASS	Nickel Plated	DFE00034-5/1 (F2017)
2	CONTACT	1	BRASS	Gold Plated	DCT01418-5/1
1	BODY	1	BRASS	Nickel Plated	DBD01823-5/1

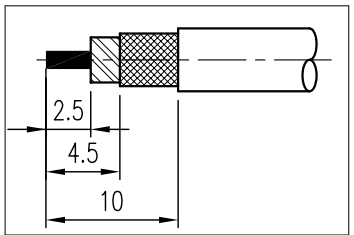

CONNECTOR CABLE 탈피도

CUSTOMER	DATE	2008. 2. 26.	
	APPROVED BY		
CUSTOMER CODE	CHECKED BY		
	DRAWN BY		
TOLERANCES .* ±0.1 .** ±0.05	SCALE 3/1	UNIT mm	WEIGHT —

KJ COMTECH
KJ COMTECH CO.,LTD.
RF & MICROWAVE TECHNOLOGY
Tel : 82-32-347-8015
Fax : 82-32-347-8017

TITLE: SMA-BJ-C-316 R.P VER.0

A4

DWG NO. CN01268-7/1

OLD CODE.