WORK / ST										
ST(Old)										
ST(Rev)										

REVISION

REV	DESCRIPTION	DATE
IR	Initial Registration	2007. 05. 08.
A	(설변 No.201001-0004) 부품 치수에 맞게 조립도 치수 변경	2010. 01. 08.
B	억지끼움부 BURR 개선 치수 변경 (설변처리No.201006-0007)	2010. 06. 07.

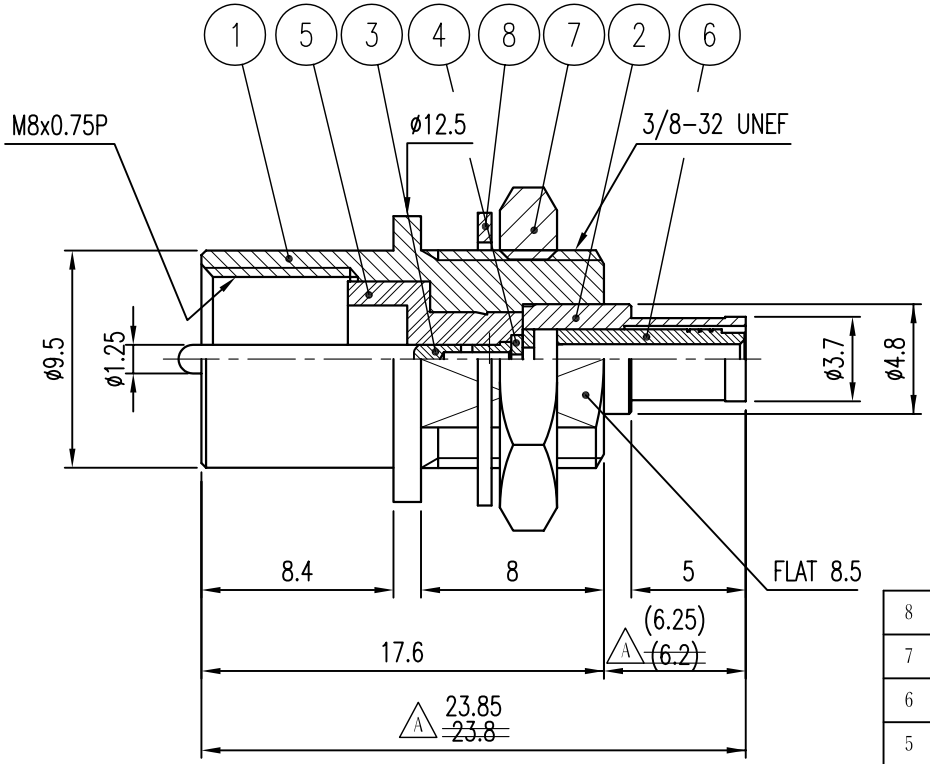

	NO.	DESCRIPTION	Q'TY	MATERIAL	PLATING	REMARKS
	8	WASHER	1	BRASS	Nickel Plated	DWA00024-5/1 (Q6011)
	7	NUT	1	BRASS	Nickel Plated	DNT00027-5/1 (N6401)
	6	INSERT	1	BRASS	Gold Plated	DIS00112-5/1 (M2018)
	5	INUSLATOR	1	PTFE		DIN01169-N/1 (HH119)
	4	INUSLATOR	1	PTFE		DIN01148-N/1 (H2350)
	3	CONTACT	1	BRASS	Gold Plated	DCT01367-5/1 (EH132)
B	2	BODY(B)	1	BRASS	Gold Plated	DBD01775-5/2 ~~DBD01775-5/1 (D2500C)~~
B	1	BODY(A)	1	BRASS	Nickel Plated	DBD01774-5/2 ~~DBD01774-5/1 (DH190)~~

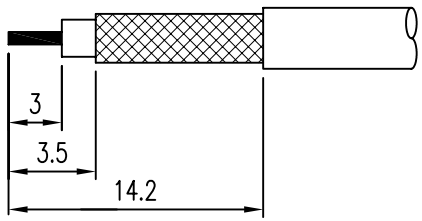

CABLE STRIPPING

CUSTOMER	DATE	2010. 06. 07.	KJ COMTECH CO.,LTD.	RF & MICROWAVE TECHNOLOGY Tel : 82-32-347-8015 Fax : 82-32-347-8017
	APPROVED BY	Y.H.CHOI		
CUSTOMER CODE	CHECKED BY		TITLE	FME-BPC-MHC231
	DRAWN BY	I.C.KIM		
TOLERANCES .* ±0.1 .** ±0.05	SCALE 5/1	UNIT mm	WEIGHT —	A4 DWG NO. CN01200-7/2
				OLD DWG NO. K750-311-000