WORK / ST										
ST(Old)										
ST(Rev)										

REVISION

REV	DESCRIPTION	DATE

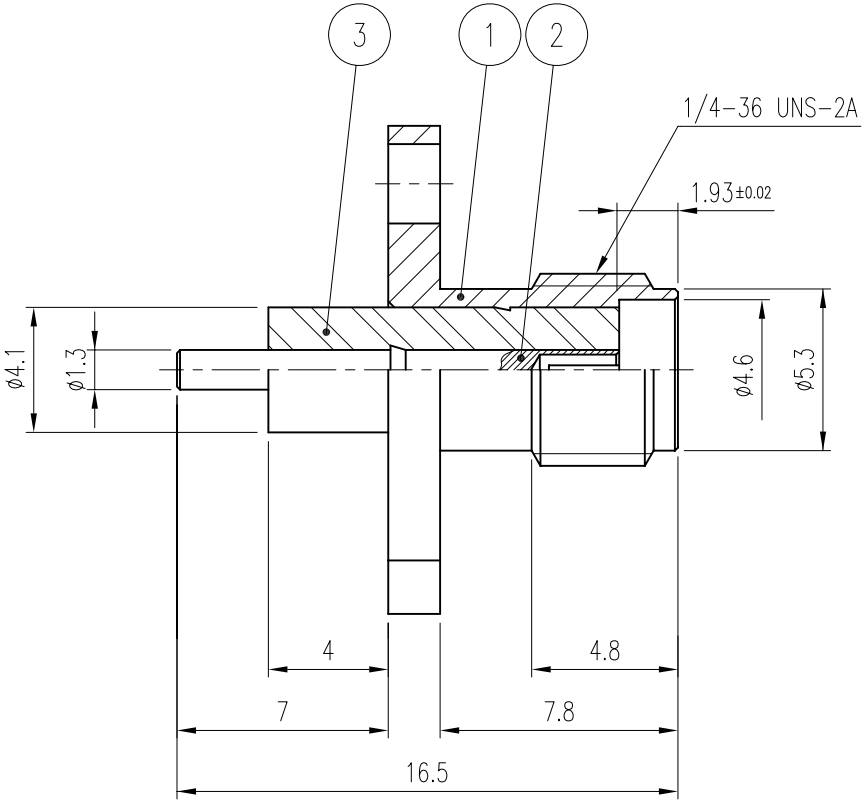

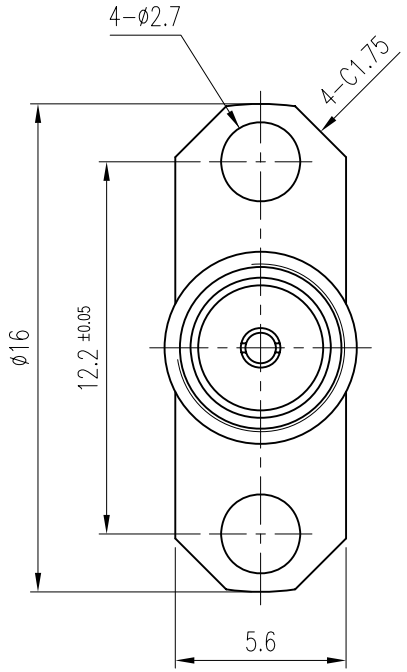

NO.	DESCRIPTION	Q'TY	MATERIAL	PLATING	REMARKS
3	INSULATOR	1	PTFE		DIN00098-N/1(H2088)
2	CONTACT	1	Beryllium copper	Gold Plated	DCT00192-5/1(E2235)
1	BODY	1	BRASS	Gold Plated	DBD00347-5/1(D2036)

CUSTOMER	DATE 2007. 12. 26.	KJ COMTECH CO.,LTD.	RF & MICROWAVE TECHNOLOGY Tel : 82-32-347-8015 Fax : 82-32-347-8017
	APPROVED BY		
CUSTOMER CODE	CHECKED BY	TITLE SMA50 SOLDER END JS-2H	
	DRAWN BY		
TOLERANCES .* ±0.1 .** ±0.05	SCALE 3/1 / UNIT mm / WEIGHT —	A4	DWG NO. CN01158-7/1
			OLD CODE.