WORK / ST										
ST(Old)										
ST(Rev)										

REVISION

REV	DESCRIPTION	DATE
R	Initial Registration	2007. 5. 8.
1	〔설변처리No.201102-0002〕 억지끼움시 burr 개선 치수 변경	2011. 2. 11.

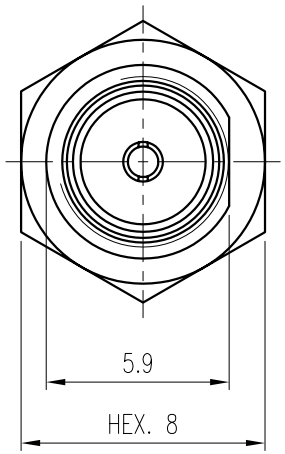

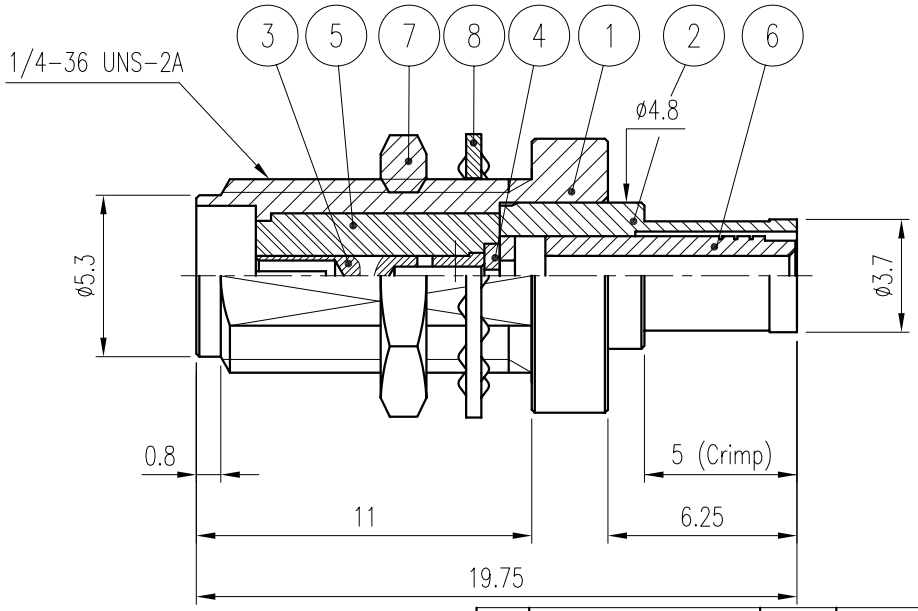

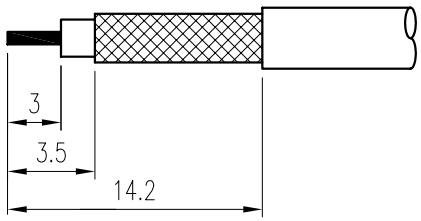

CABLE STRIPPING

NO.	DESCRIPTION	Q'TY	MATERIAL	PLATING	REMARKS
8	WASHER	1	BRASS	Gold Plated	DWA00005-5/1
7	NUT	1	BRASS	Gold Plated	DNT00024-5/1 (N2001)
6	INSERT	1	BRASS	Gold Plated	DIS00112-5/1 (M2018)
5	INSULATOR	1	PTFE		DIN01170-N/1 (H2375)
4	INSULATOR	1	PTFE		DIN01148-N/1 (H2350)
3	CONTACT	1	Beryllium copper	Gold Plated	DCT01368-5/1 (E2563)
1 2	BODY (B)	1	BRASS	Gold Plated	DBD01775-5/2 ~~DBD01775-5/1 (D2500C)~~
1 1	BODY (A)	1	BRASS	Gold Plated	DBD01725-5/2 ~~DBD01725-5/1 (D2543)~~

CUSTOMER	DATE	2011. 2. 11.	KJ COMTECH CO.,LTD. — RF & MICROWAVE TECHNOLOGY Tel : 82-32-347-8015 Fax : 82-32-347-8017
	APPROVED BY	Y. H. CHOI	
CUSTOMER CODE	CHECKED BY		TITLE: SMA-BJC-MHC-231
	DRAWN BY	I. C. KIM	
TOLERANCES .* ±0.1 .** ±0.05	SCALE 4/1	UNIT mm	WEIGHT —
A4	DWG NO.	CN01054-7/2	
	OLD DWG NO.	K314-378-000	