REVISION				
REV	DESCRIPTION	DRAWN	APPR	DATE
IR	Initial Registration	I.C.KIM		2018. 11.01.
1	절연체 구성 변경	I.C.KIM		2019. 08.05.

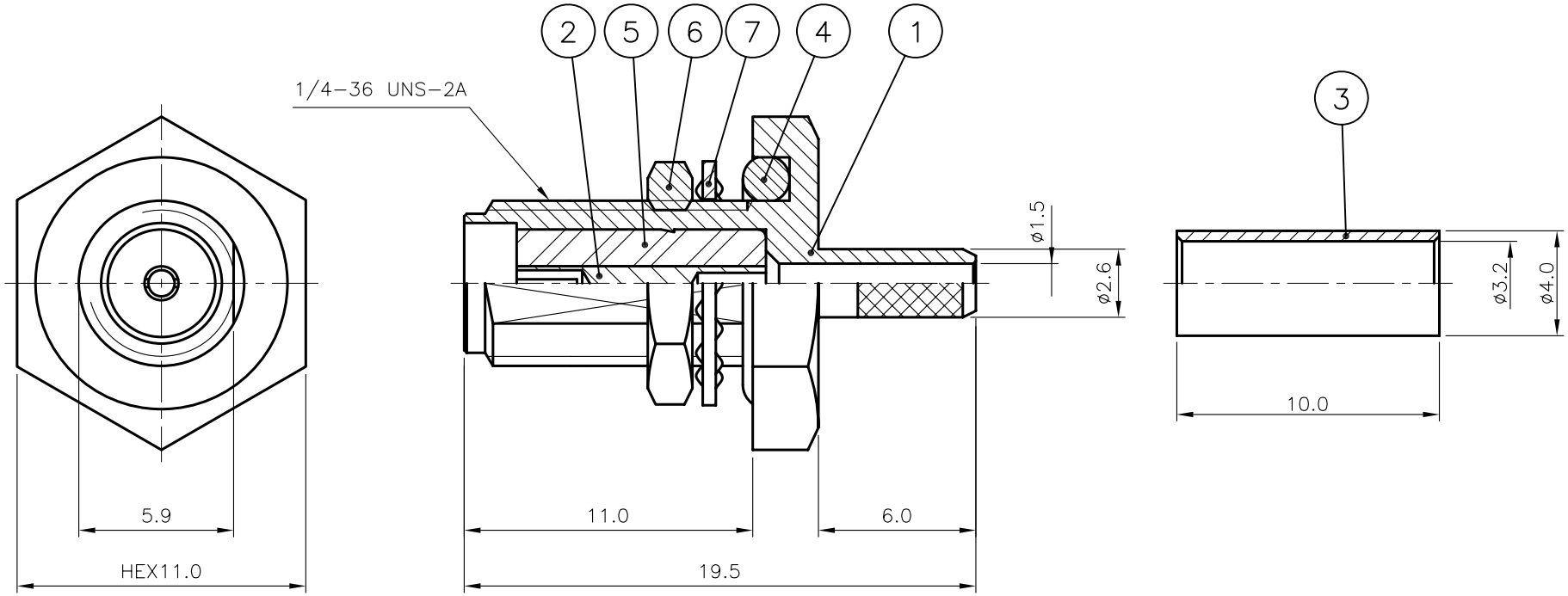

NO.	DESCRIPTION	Q'TY	MATERIAL	PLATING	CODE
7	WASHER	1	MBsBD C3604BD-F	Gold Plate	DWA00005-5/1
6	NUT	1	MBsBD C3604BD-F	Gold Plate	DNT00025-5/1
1 5	INSULATOR	1	TEFLON		DIN00191-N/1 ~~DIN00165-N/1~~
4	GASKET	1	SILICONE RUB		DGK00023-N/1
3	FERRULE	1	MBsBD C3604BD-F	Nickel Plate	DFE00034-5/1
2	CONTACT	1	BeCu C17300	Gold Plate	DCT00143-5/1
1	BODY	1	MBsBD C3604BD-F	Gold Plate	DBD00172-5/3

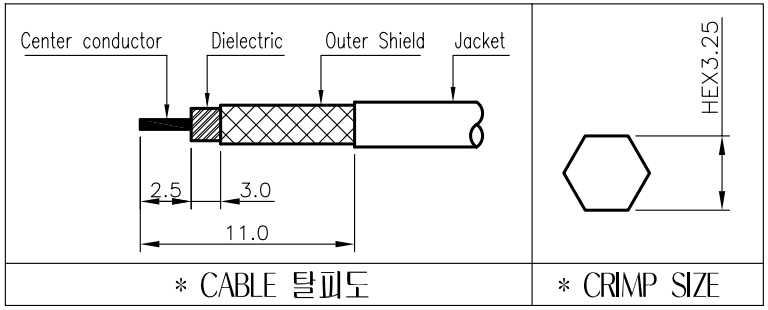

TOLERANCE	Decimal ±0.2	DATE	2019. 08. 05.
	Angle ±1°	APPROVED BY	
		CHECKED BY	
MATERIAL		DRAWN BY	I.C.KIM
FINISH		SCALE 4/1	UNIT mm

KJ COMTECH
KJ COMTECH CO.,LTD.
RF & MICROWAVE TECHNOLOGY
Tel : 82-32-347-8015
Fax : 82-32-347-8017

TITLE
SMA50 CABLE JB (F/N) SIFS

A4

DWG NO. CN01034-7/4
REVISION 1
SHEET 1 of 1