REVISION				
REV	DESCRIPTION	DRAWN	APPR	DATE
IR	Initial Registration	E.H.KIM	I.C.KIM	2012.12.19.

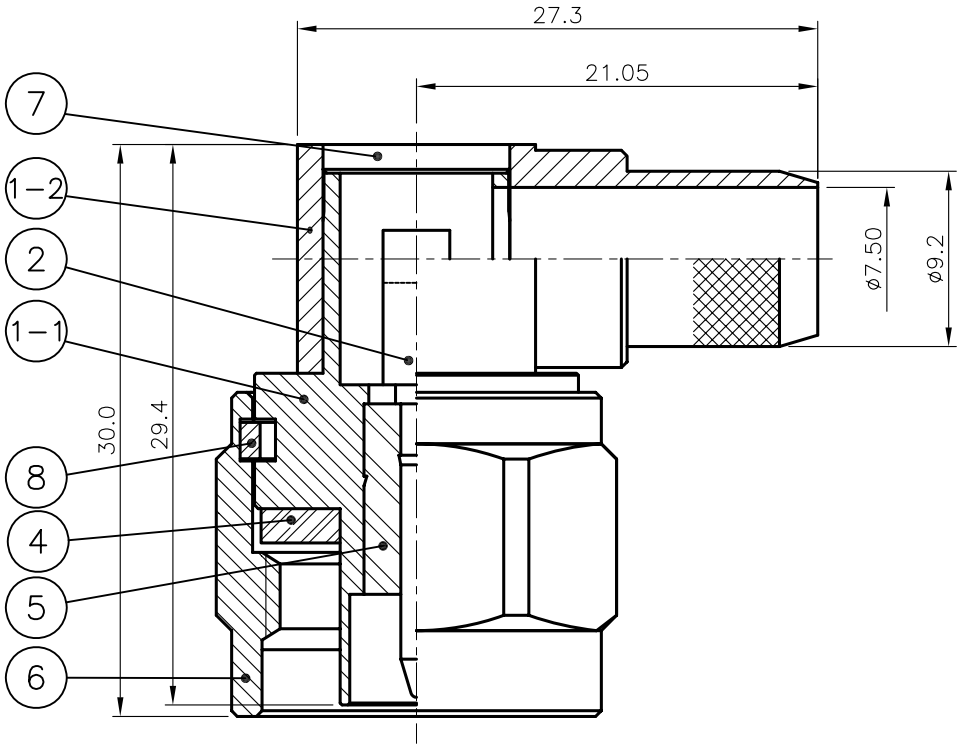

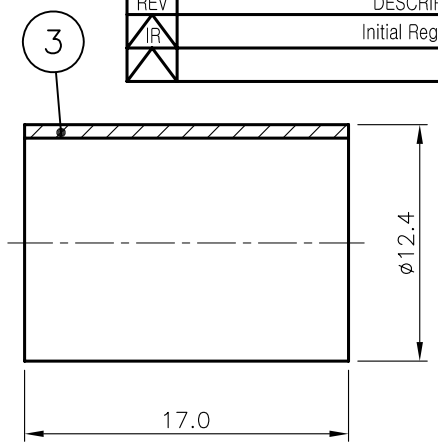

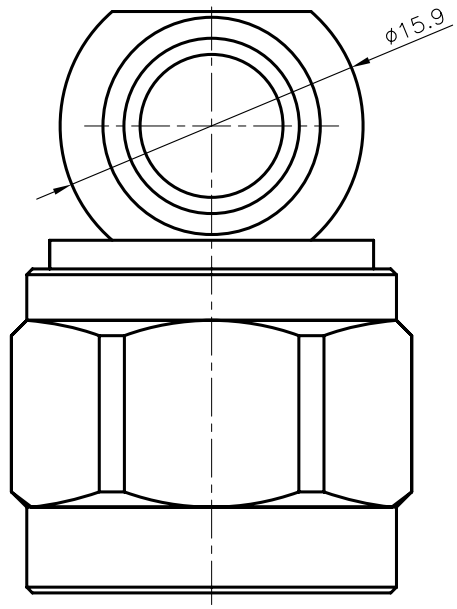

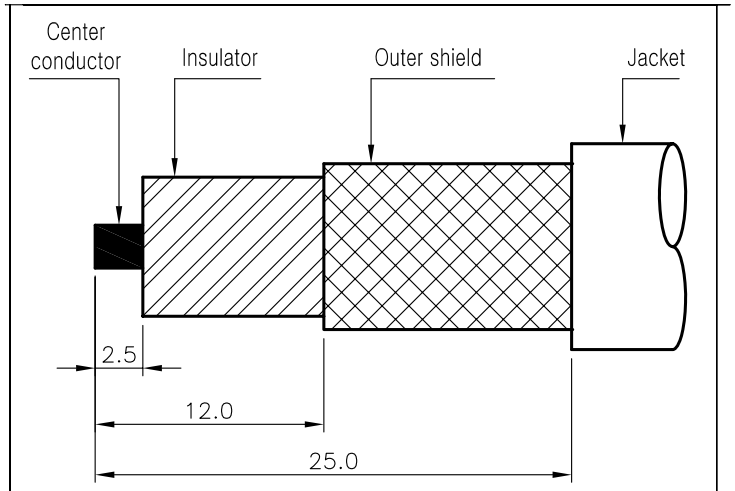

CABLE 탈피도

NO.		DESCRIPTION	Q'TY	MATERIAL	PLATING	CODE	
8		SPRING RING	1	PBR	Nickel Plate	DSR00020-5/1	
7		COVER	1	MBsBD	Nickel Plate	DCO00085-5/1	
6		COUPLING CAP	1	MBsBD	Nickel Plate	DCU00063-5/3	
5		INSULATOR	1	TEFLON		DIN02096-N/1	
4		GASKET	1	SILICONE RUB		DGK00013-N/1	
3		FERRULE	1	MBsBD	Nickel Plate	DFE00070-5/1	
2		CONTACT	1	MBsBD	Gold Plate	DCT02728-5/1	
1	1-2	BODY	1	MBsBD	Nickel Plate	DBB00330-5/1	DBD03222-3/1
	1-1	BODY	1	MBsBD	Nickel Plate		DBD03219-3/1

TOLERANCE	Decimal ±0.2	DATE	2012. 12. 19.
	Angle ±1°	APPROVED BY	I.C.KIM
		CHECKED BY	
MATERIAL		DRAWN BY	E.H.KIM
FINISH		SCALE 2.5/1	UNIT mm

KJ COMTECH
KJ COMTECH CO.,LTD.
RF & MICROWAVE TECHNOLOGY
Tel : 82-32-347-8015
Fax : 82-32-347-8017

TITLE
N50 CABLE PL RG214(50Ω)

A4 | DWG NO. CN00776-7/2 | REVISION I R | SHEET 1 of 1